# A Novel Battery-less Remote Control System based on Low-Cost Passive RFID Technology

Alírio Jesus Soares Boaventura
And Nuno Borges Carvalho

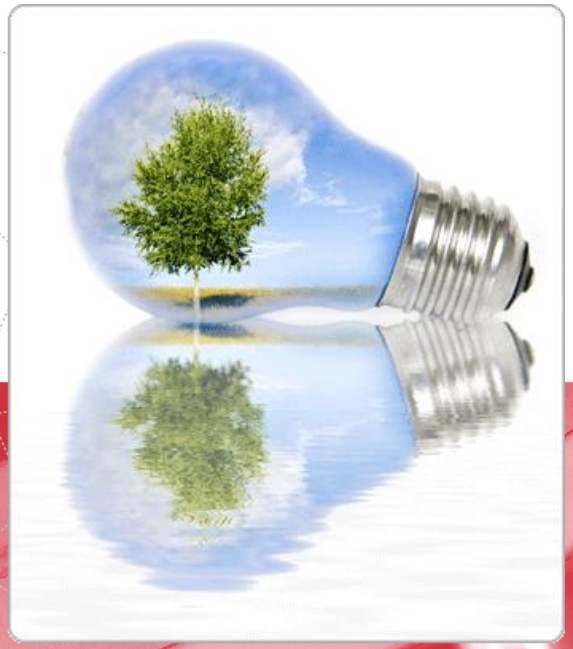

INSTITUIÇÕES ASSOCIADAS:

INSTITUTO SUPERIOR TÉCNICO

Faculdade de Ciências e Tecnologia da Universidade de Coimbra

universidade de aveiro

PT Inovação

SIEMENS Communications

instituto de telecomunicações

*creating and sharing knowledge for telecommunications*

# Presentation outline

- Introduction to E. Harvesting and WPT
  - Application examples
- Battery-less remote controls: Motivation
- Proposed approaches
  - PWS-alike Configuration
  - Multi-RFID configuration
- The Multi-RFID scheme
- Simulations and Measurements
- A demonstration Prototype
- Safety Issues

# Brief Introduction to E. Harvesting and WPT

- Energy Harvesting

Ambient Electromagnetic Energy

- Wireless Power Transmission

Dedicated and known Transmitter

**Wi-Fi**

**GSM/Cellular**

**Radio and TV broadcast**

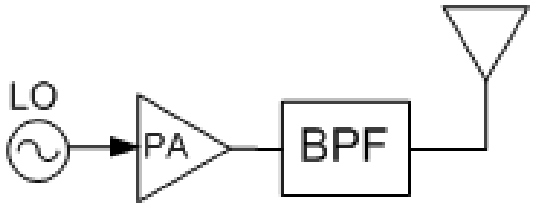


**Dedicated transmitter**

**Rectenna = antenna + rectifier**

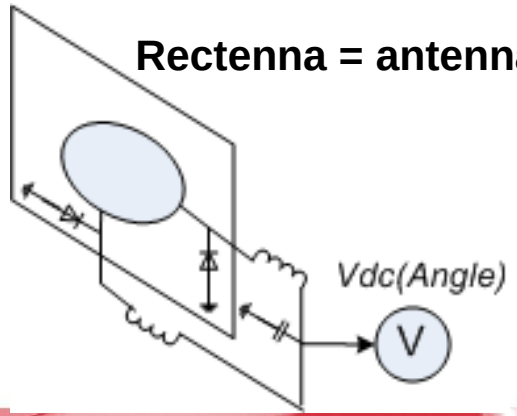


- In both cases: Received RF energy is converted into DC power

# Brief Introduction to E. Harvesting and WPT

Use of cables or batteries …

sometimes  is unpractical, undesirable or even impossible

**WPT Application examples:**

- ✓ Medical applications → Implantable Electronic Devices (IED's) placed within the patient's body
- ✓ Smart Houses → Sensors can be placed within walls
- ✓ Automotive → Tire Pressure Sensors (TPS's) inside car tires
- ✓ Electric vehicles  → Wireless car charging
- ✓ Home Automation (we believe ☺)

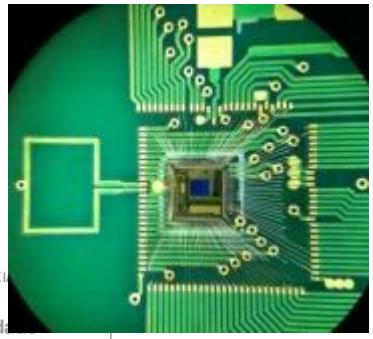

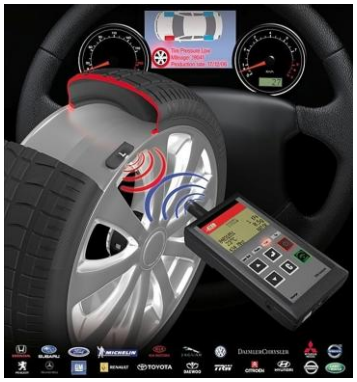

# Battery-less remote controls: Motivation

- Remote controls are used to wirelessly control TV's, doors, games, …

- Major drawbacks of conventional Infra-Red (IR) technology:
  - IR communication requires line-of-sight
  - **Use of chemical disposable batteries:**
  - Cost associated to battery maintenance
  - Limited lifetime of batteries
  - Batteries generate toxic waste in the end of lifecycle
  - Beyond monetary cost, there is an environmental price

# Battery-less remote controls: Motivation

- Batteries take **hundreds of years to decompose**, posing a serious threat to the public health and to the environment.

- Considering 4 Million habitual residences in Portugal (INE – Censos 2011) and assuming that:
  - ✓ 75% of them have a TV equipment
  - ✓ 40% have a cable TV Box
  - ✓ 30% have a Sound System


- We end up with an average of **5.8 Millions of remotes in Portugal**
- Assuming two batteries per remote and two battery changes per year we have a **total of 23.2 Millions batteries being wasted every year !!**

# Proposed approaches

A battery-free **Remote Control System** is proposed:

- The Remote requires no battery, based on passive RFID technology
- Device to be Controlled wirelessly powers the remote control using radio waves
- The remote control send back information using Backscattering (Power reflection)

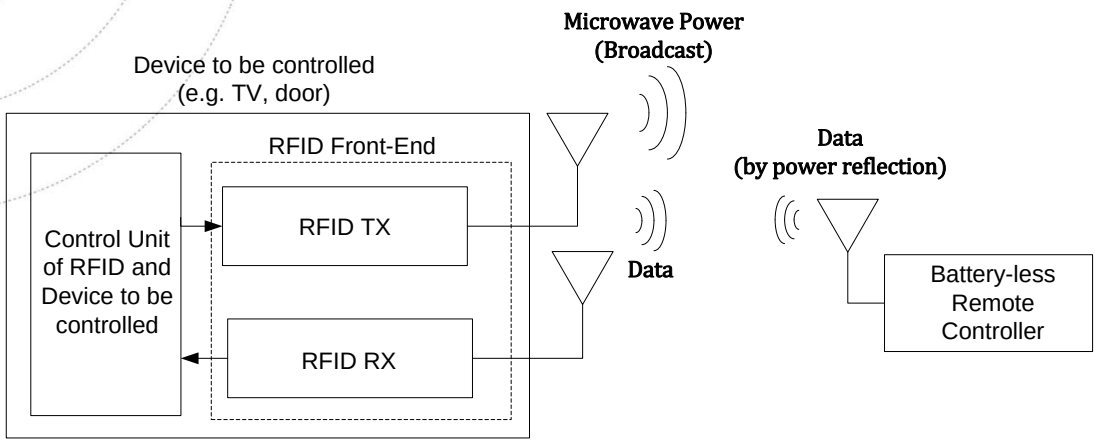


## Advantages compared to conventional IR technology:

- ✓ **Elimination of costs** associated to battery maintenance and treatment of toxic waste
- ✓ **Long range and no line of sight communication** thanks to the use of radio waves
- ✓ **Cost-effective solution**, thanks to the use of a low-cost RFID technology (UHF EPC)

# Proposed approaches

Option I: Passive Wireless Sensor - alike

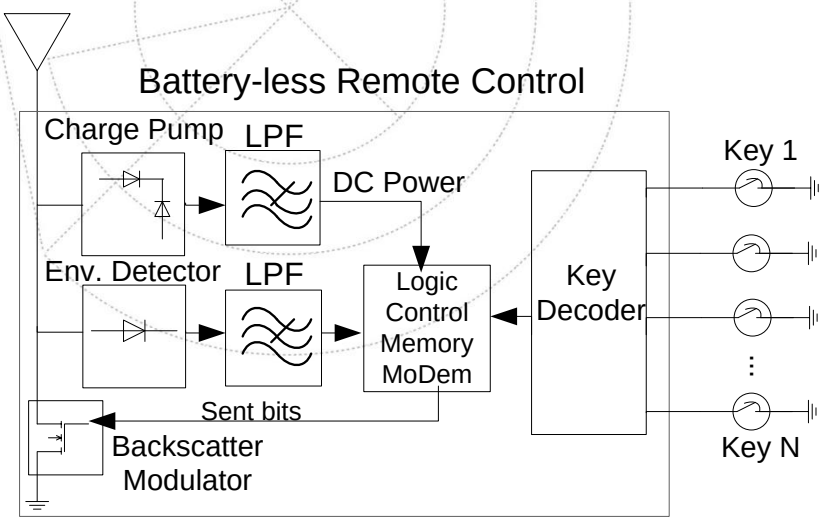


Option II: Multi-RFID scheme

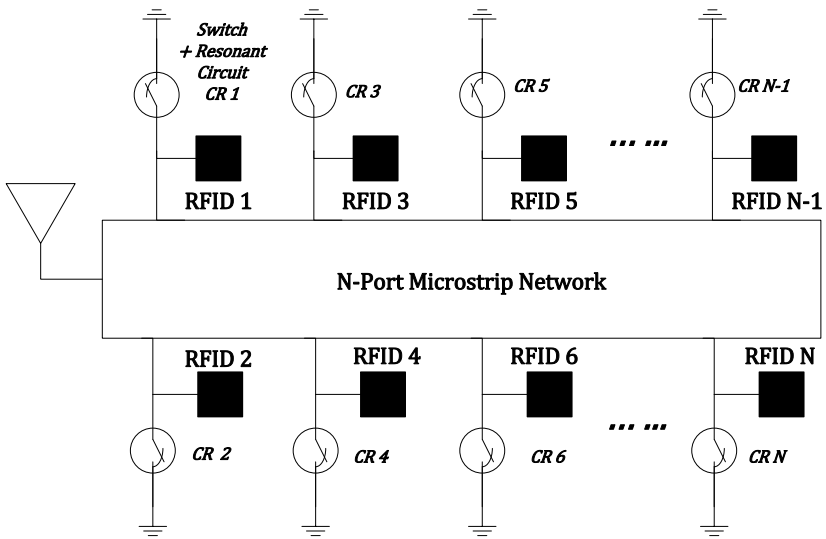


## Multi-RFID scheme is implemented

- Several RFID chips are used, each one associated to a key
- Only the chip associated to the pressed key should be read by the RFID reader to identify the key

# The Multi-RFID scheme

**Operating principle:**

- N passive RFID tags associated to N keys/switchs
  - By default, no tag responds to reader (silent mode)
  - Once a key is pressed the respective tag is allowed to respond
  - Inactive tags must not interfere with the active one
- Two challenges: Antenna sharing, Tag activation/deactivation

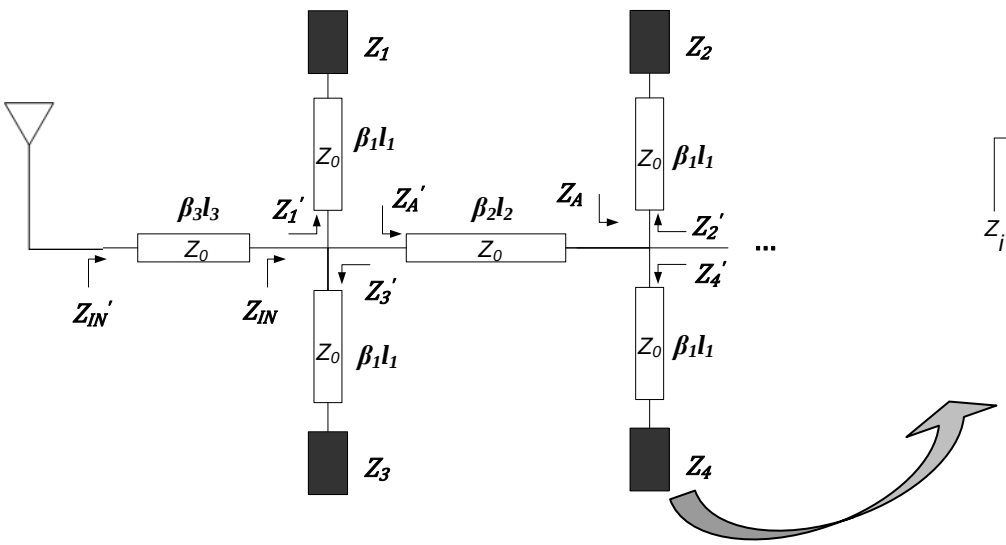


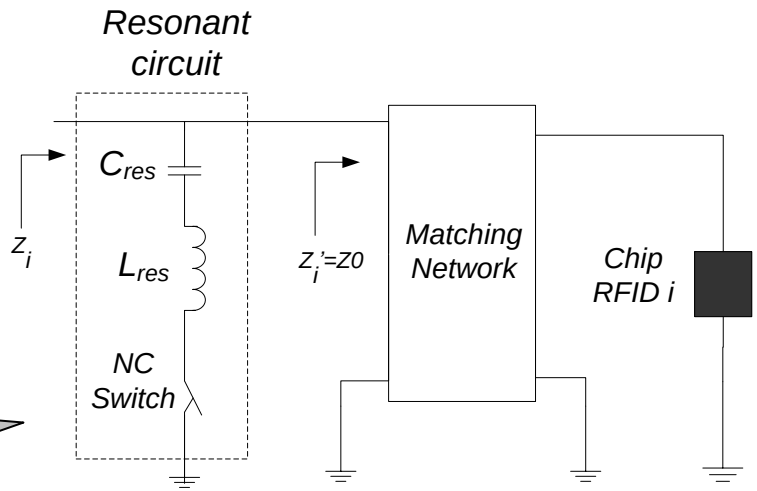


**Tags interconnection (N-port Network)**

**Port termination**

= 0 Ohms by default

= 50 Ohms if user presses the key

# The Multi-RFID scheme

## Novel N-Port Microstrip Network (866.6MHz)

$$Z_i' = Z_0 \frac{Z_i + jZ_0 \tan(\beta_1 l_1)}{Z_0 + jZ_i \tan(\beta_1 l_1)}; \quad Z_A' = Z_0 \frac{Z_A + jZ_0 \tan(\beta_2 l_2)}{Z_0 + jZ_A \tan(\beta_2 l_2)}$$

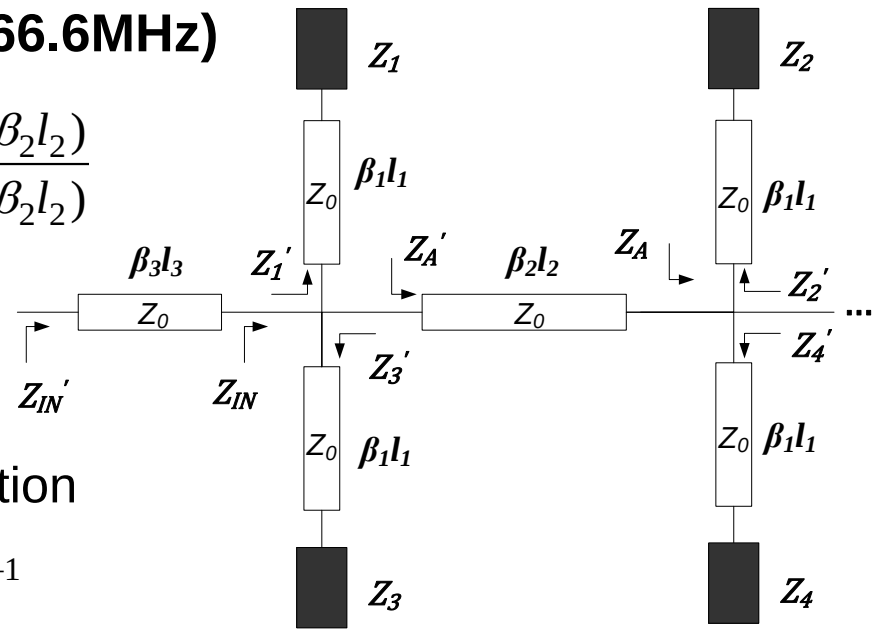


If $\beta_2 l_2 = k.180^o$ then: $\tan(k\beta_2 l_2) = 0$

$$Z_A' = Z_A$$

Thus, this is simplified to a parallel association

$$Z_{IN} = \left[ \sum_{i=1}^{N} \frac{1}{Z_i'} \right]^{-1} = \left[ \sum_{i=1}^{N} \frac{Z_0 + jZ_i \tan(\beta_1 l_1)}{Z_0 \left( Z_i + jZ_0 \tan(\beta_1 l_1) \right)} \right]^{-1}$$

Now, if $Z_{i=n} = Z_0$ and $Z_{i \neq n}=0$ and $\beta_1 l_1 = 90^o + k.180^o$ then:

$$Z_{IN} = \left[ \begin{array}{l} \dfrac{Z_0 + jZ_1 \tan(90^o)}{Z_0 \left( Z_1 + jZ_0 \tan(90^o) \right)} + \dfrac{Z_0 + jZ_2 \tan(90^o)}{Z_0 \left( Z_2 + jZ_0 \tan(90^o) \right)} \\ \ldots + \dfrac{Z_0 + jZ_n \tan(90^o)}{Z_0 \left( Z_n + jZ_0 \tan(90^o) \right)} \ldots + \dfrac{Z_0 + jZ_N \tan(90^o)}{Z_0 \left( Z_N + jZ_0 \tan(90^o) \right)} \end{array} \right]^{-1} = Z_n = Z_0$$

# The Multi-RFID scheme

**Example:** key # 4 is pressed → RFID4 is routed to the antenna port without interference of idle tags

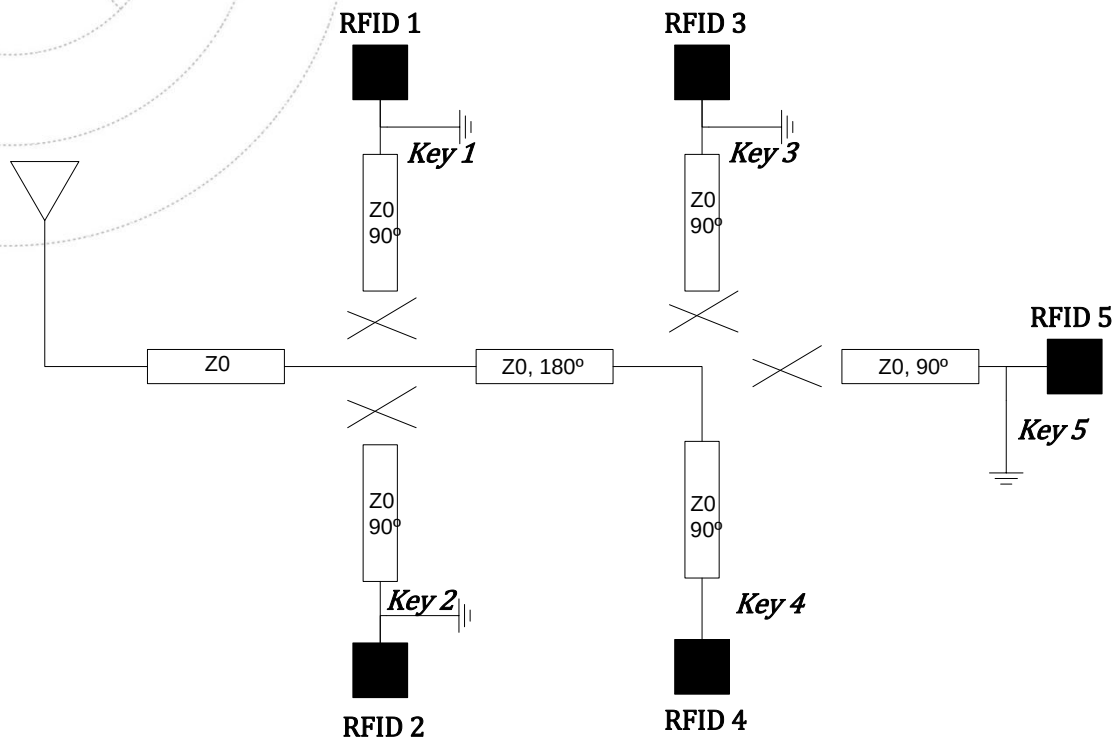

# Simulations and Measurements

## RFID chip measurement

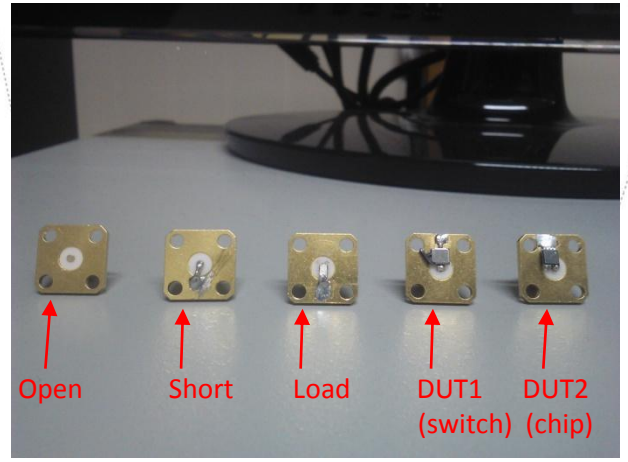


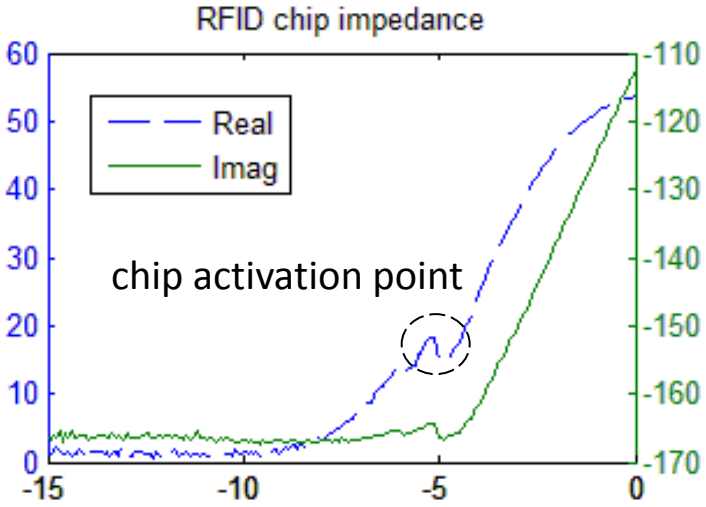


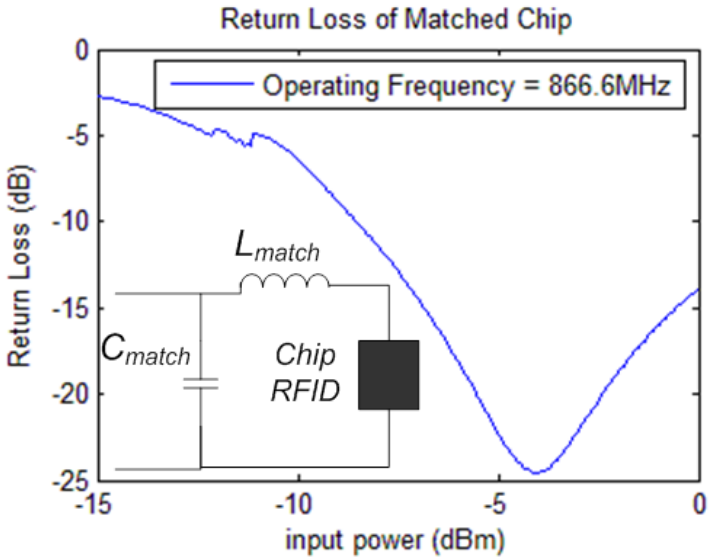

# Simulations and Measurements

## Switch characterization

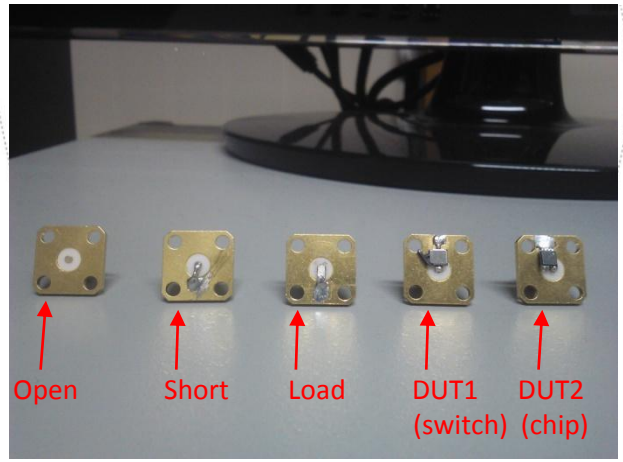


Closed Position
inductive behavior →

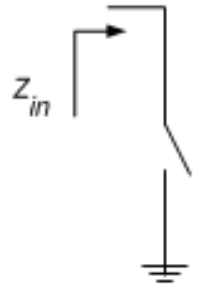


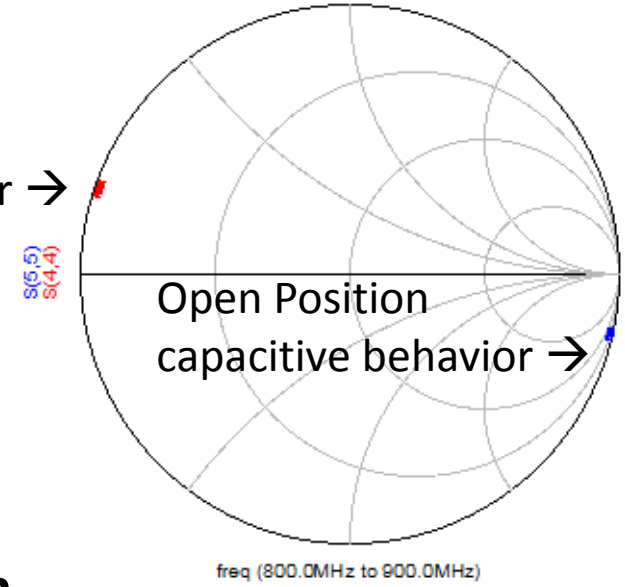


**NC switch**

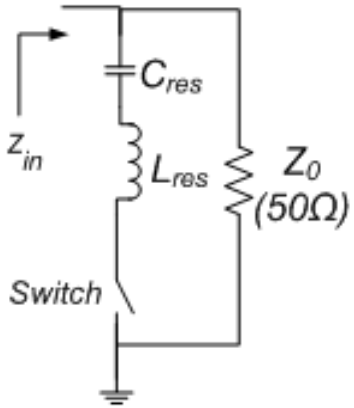


Switch Closed
Zin ≈ 0 Ohms →

Switch Open
Zin ≈ 50 Ohms

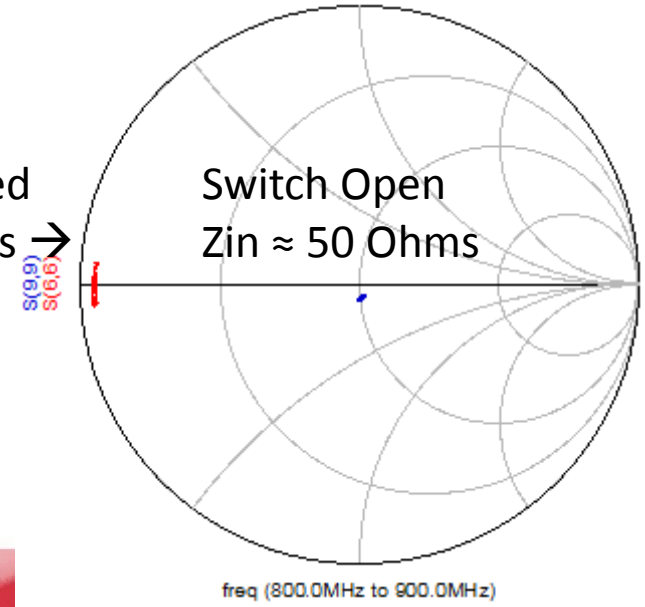


**Port termination**

# Simulations and Measurements

## N-Port Network Simulation and Measurement

Objective: measure Return loss (S11, S22) and Transmission coefficient (S21, S12)

Scenario: Only one tag is active, rest of them are short-circuited (inactive)

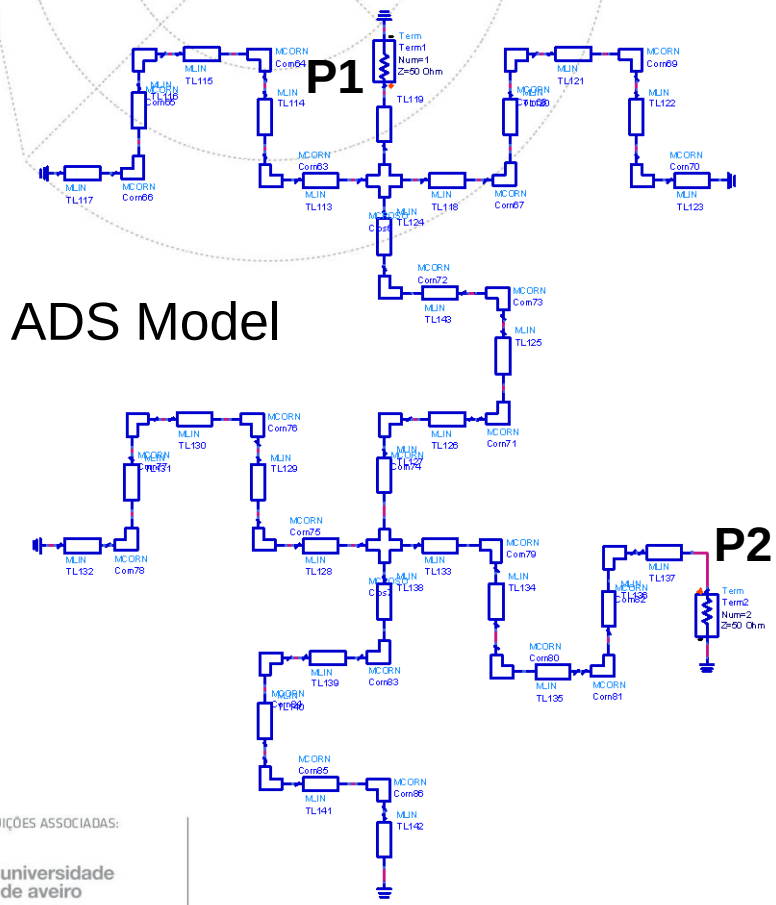


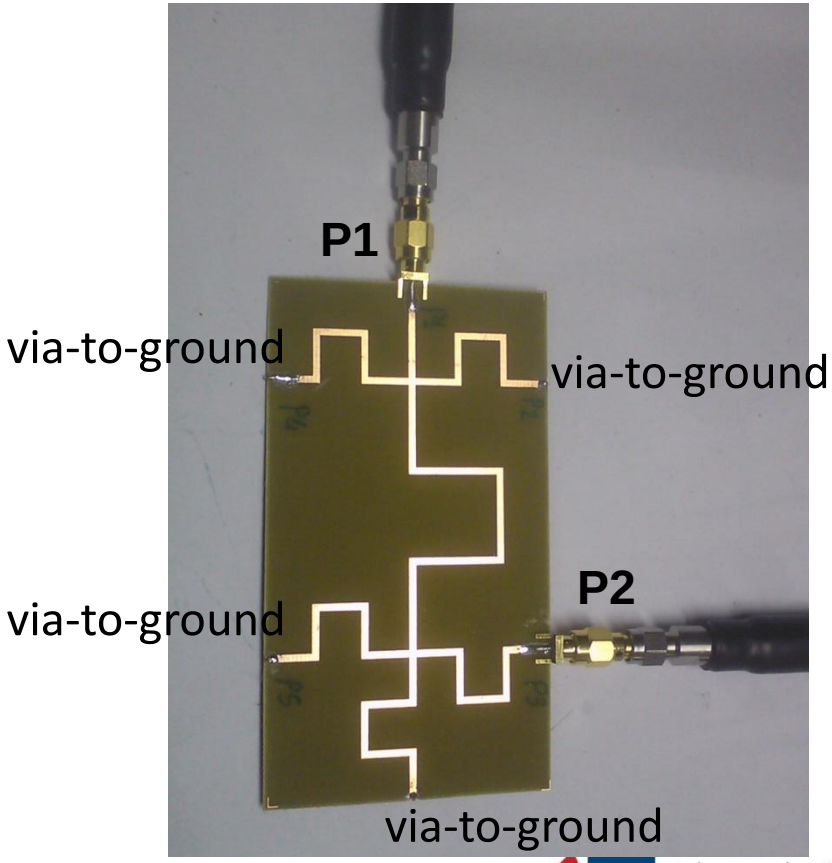

# Simulations and Measurements

## N-Port Network Simulation and Measurement

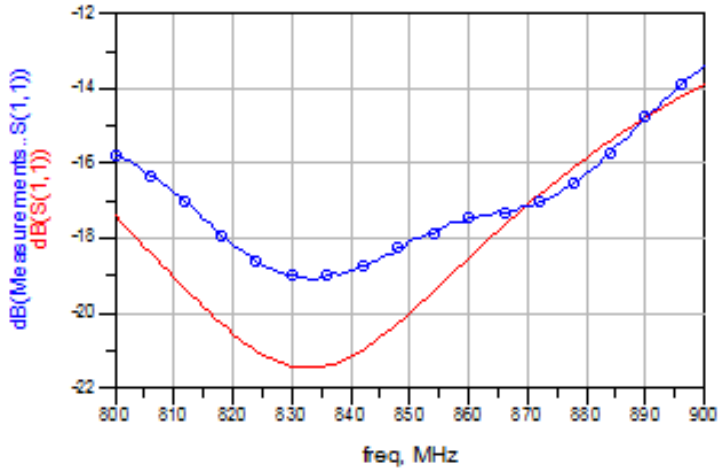


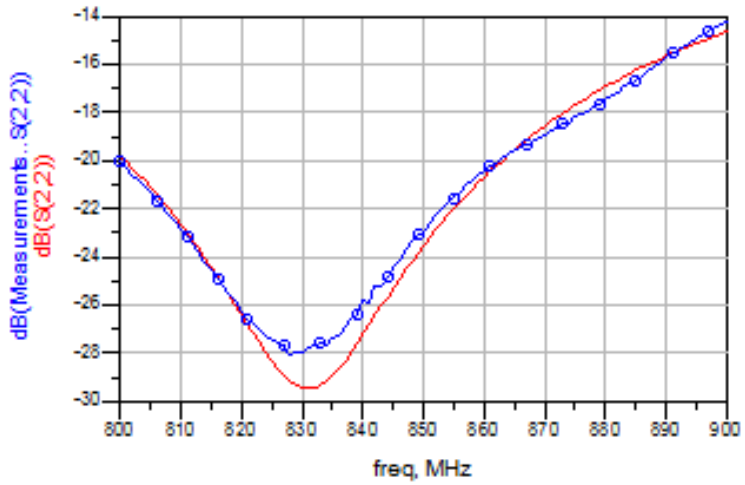


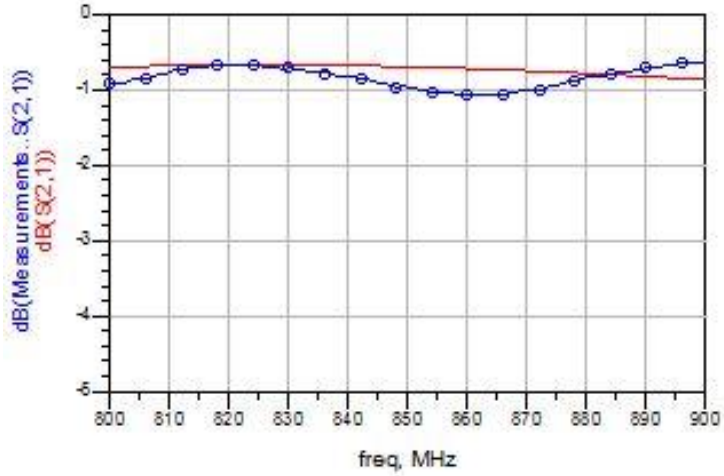


- ✓ Measurements agree well with Simulations
- ✓Good return loss (S11,S22) less than -14dB in the band of interest
- ✓ Acceptable insertion loss, around -1dB

# Simulations and Measurements

## Remote control prototypes: 3, 4 and 5 keys

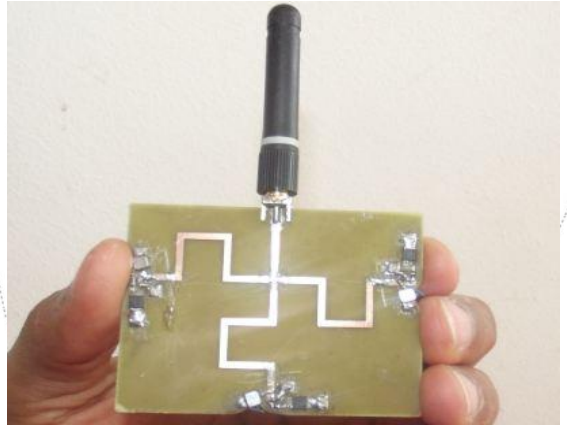

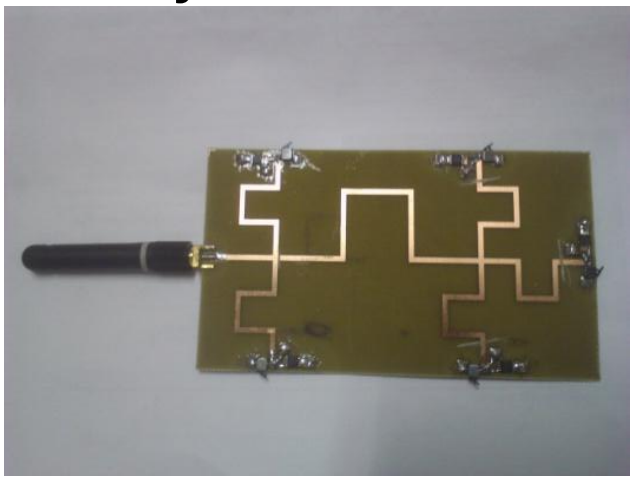

Return loss (S11) of 4-key prototype when each key is presses by the user

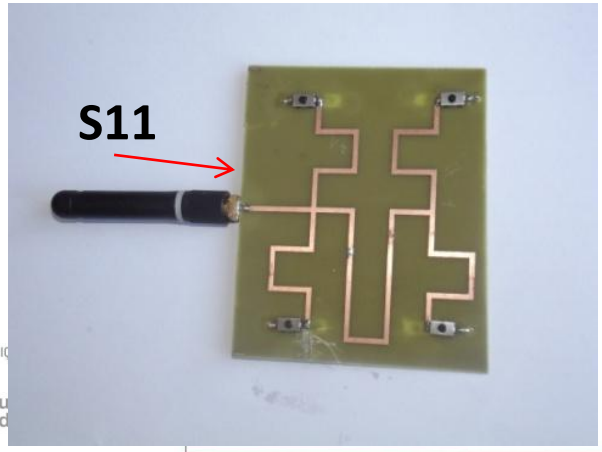


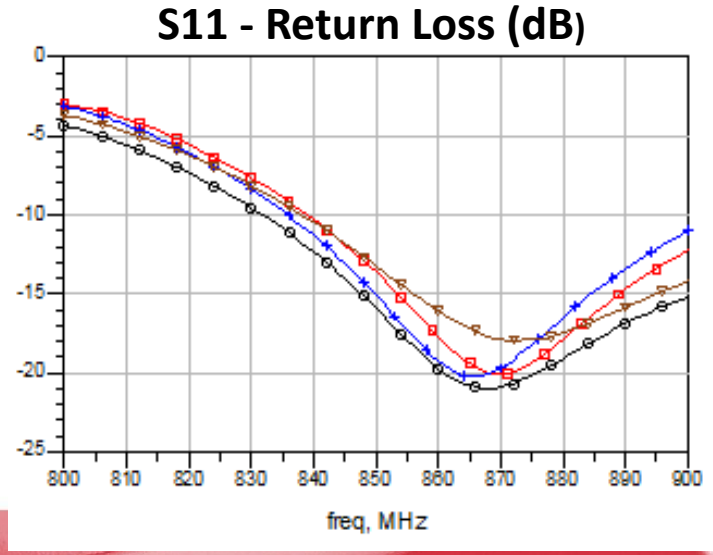


o – key 1 pressed
x – key 2 pressed
▪ – key 3 pressed
< – key 4 pressed

# A demonstration Prototype

- ✓ The complete system has been successfully tested and validated
- ✓ The remote control system has been integrated in a TV device
- ✓ **CH +**, **CH -**, **Vol +** and **Vol –** functions were implemented.

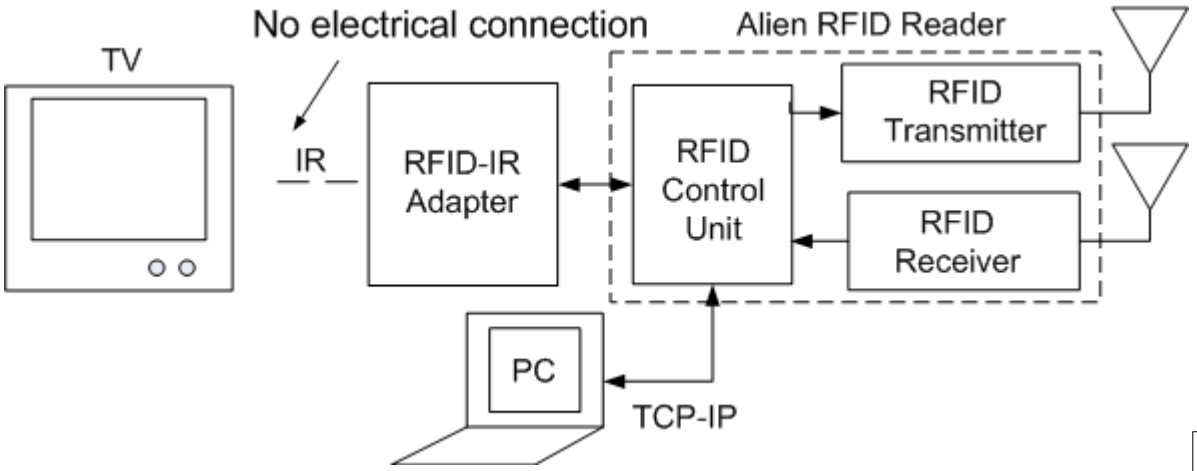


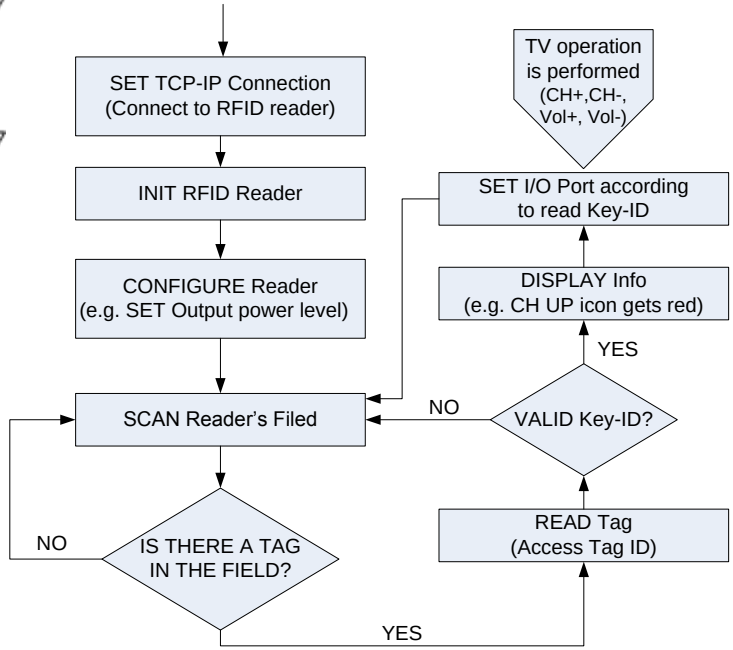


The prototype is composed by:

1) TV
2) RFID reader and Computer
3) RFID-IR adapter

Flowchart of demo application software running in a computer

# A demonstration Prototype

Demo Setup

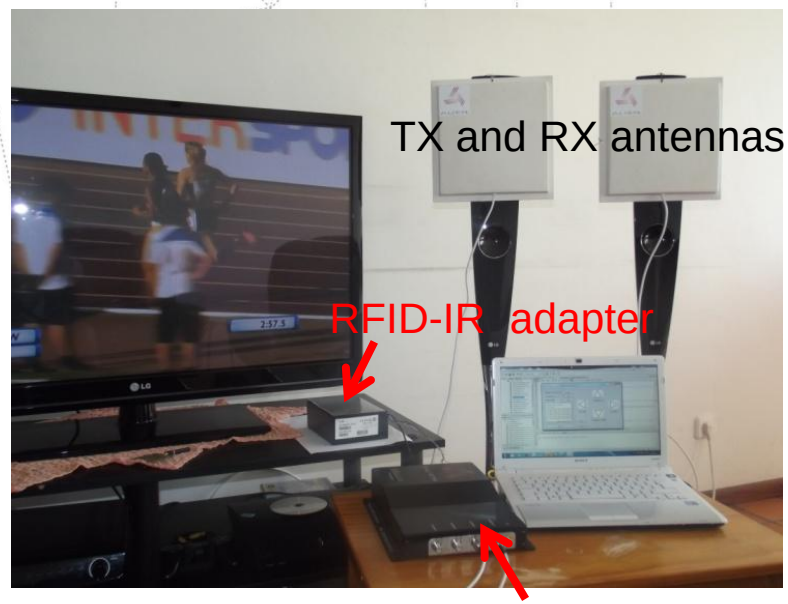


Java Interface Application

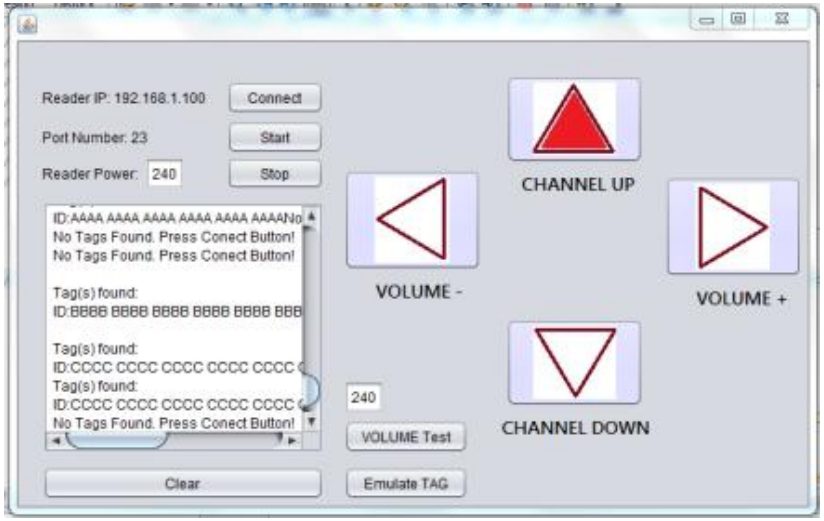

# Safety Issues

- ✓ It is important to comply with safety regulation standards, namely maximum radiated power
- ✓ Maximum radiated power levels between 20 - 27dBm (~100mW : ~ 500mW) were used (Maximum of 33dBm (2W) is allowed by ETSI [1] and ANACOM)
- ✓ Recommended Maximum exposure level at UHF band is **580uW/cm$^2$**, FCC[3], IEEE [1].
- ✓ For $P_t$=500mW, $G_t$=6dBi (4), D=3m (**$P_r$=0.17mW**) → **$S_{av}$= 0.44 uW/cm$^2$**
- ✓ State-of-art RFID chip sensitivity is between -10dBm (**0.1mW**) and -15dBm


[1] – **European Telecommunications Standards Institute** (ETSI), EN 302 208: Electromagnetic compatibility and Radio spectrum Matters (ERM) – Radio-frequency identification equipment operating in the band 865MHz to 868MHz with power levels up to 2W, Technical characteristics and test methods

[2] **– IEEE Standard for Safety Levels** with respect to Human Exposure to Radio Frequency Electromagnetic Fields, 3 kHz to 300 GHz

[3] - Tell, R.A., "Engineering Services for Measurement and Analysis of Radiofrequency (RF) Fields,"Richard Tell Associates, Inc., Las Vegas, NV. Project performed under contract for **Federal Communications Commission** (FCC), Office of Engineering and Technology, Washington.

# Conclusions

- A battery-less remote control system has been prototyped
- The system complies with regulations in regard to maximum exposure levels …
- However, more work is needed to solve the problem of having the RFID reader always turned on (e.g. using an ON/OFF approach in TX).
- The proposed Multi-RFID scheme find many other applications such as:
  - Battery-less keyboards
  - Multi-function cards
  - User-controlled cards
- A patent application has been requested for the Multi-RFID scheme [1]

[1] Alírio J.S. Boaventura and N. B. Carvalho, *Controlo Remoto Passivo RFID e Sistema e Método de Compatibilização com a Tecnologia Convencional*. Patent application submitted to INPI – Intituto Nacional de Propriedade Intelectual

Thank you!

Questions?