instituto de telecomunicações | Aveiro

universidade de aveiro

ANACOM AUTORIDADE NACIONAL DE COMUNICAÇÕES

U.R.S.I. PORTUGAL

3D Antenna for Wireless Power Transmission

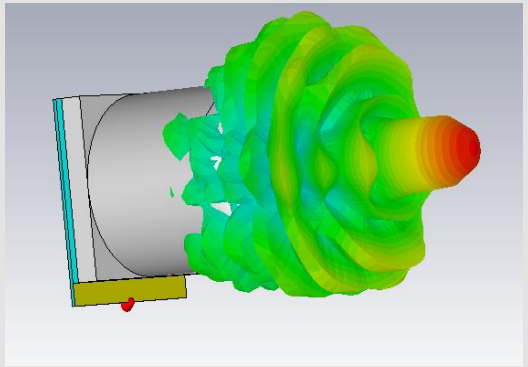

Orientador: Nuno Borges Carvalho (nbcarvalho@ua.pt)
Co-Orientador: Pedro Pinho (ppinho@deetc.isel.pt)
Colaborador: Ricardo Gonçalves (rgoncalves@av.it.pt)

Autor: Gonçalo Amorim Dias (goncaloadias@ua.pt)

Abstract

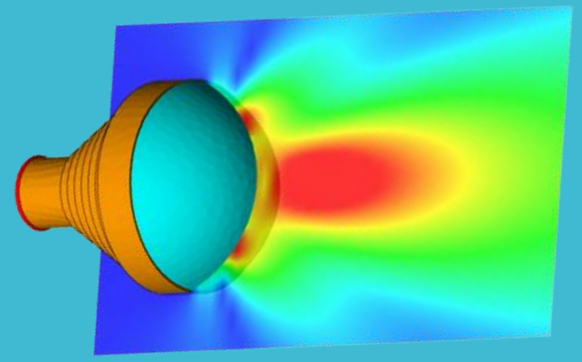

3D printers work with plastics materials, which are essentially dielectric. These can be used as radiating elements (dielectric resonators), as radiation handlers (lenses) or as a supporting base for applying conductive material to radiation (substrates). In this paper is explored the solution based on lenses, through the 3D printing technology.

The design, simulation and build of an aperture coupled microstrip antenna with dielectric lens is presented.

The antenna operates at 20 GHz. The lens is used to focus the beam of lower gain feed antenna to produced highly directive pattern with low side lobe levels

Wireless Power Transmission

- N.Tesla 1914
- Solar-Power Satellite Wireless Power Transmission 1970
- RFID 1973
- Wireless comercial Charger (mobile phone) 2015

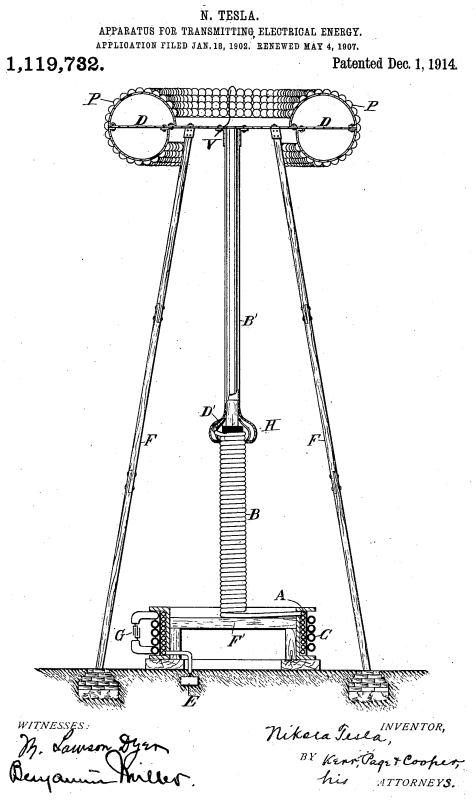

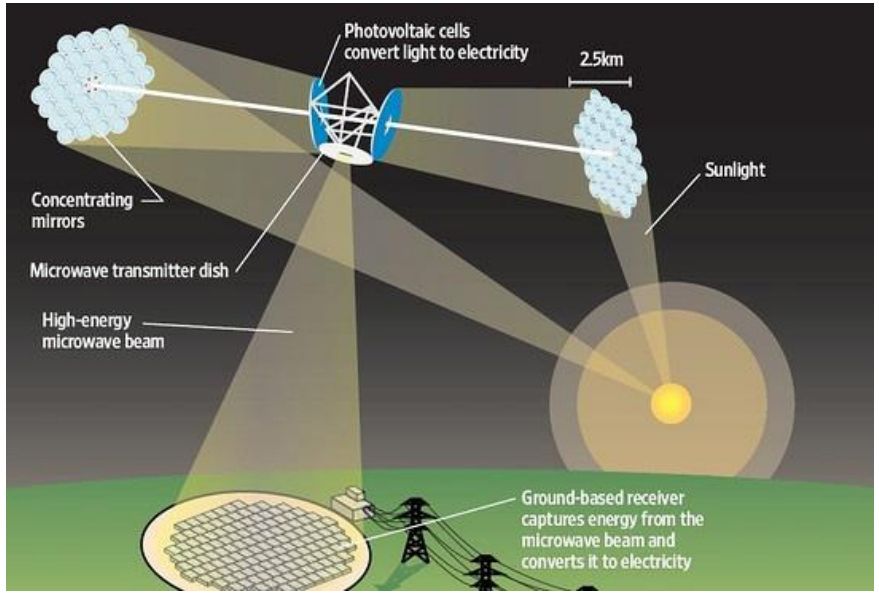

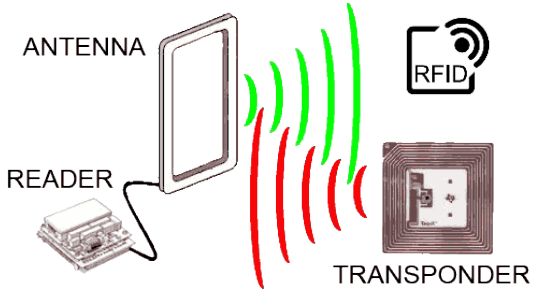

Microwave Wireless Power Transmission

Friis equation (Simple)

$$\frac{P_r}{P_t} = G_t G_r \left(\frac{\lambda}{4\pi R}\right)^2$$

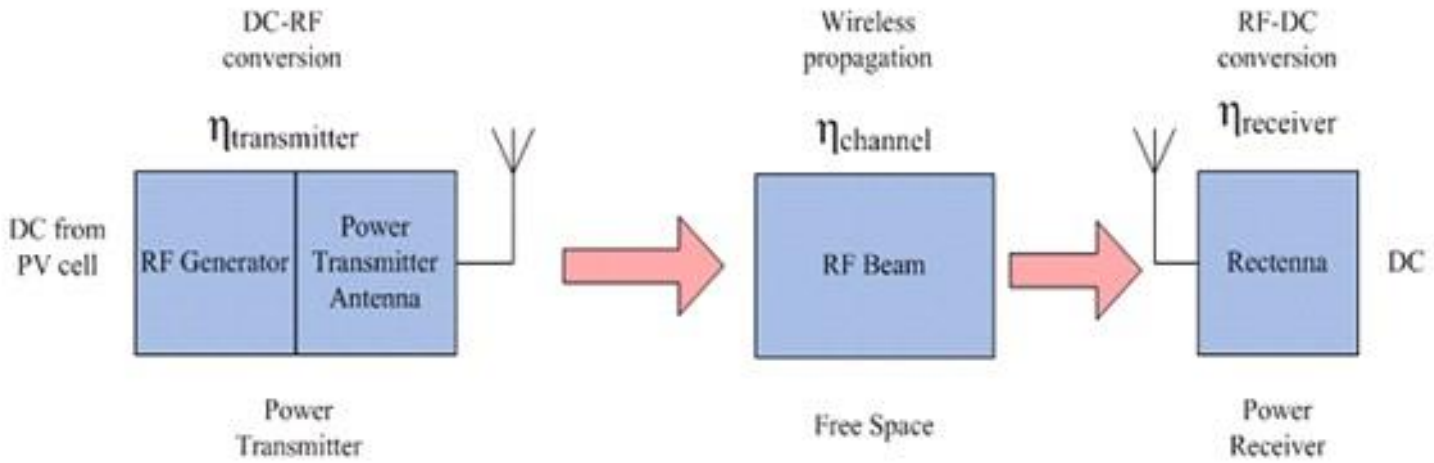

$$\eta_{DC\text{-}RF\text{-}DC} = \eta_{transmitter}\ \eta_{channel}\ \eta_{receiver}$$

APERTURE COUPLED MICROSTRIP ANTENNA

$$W = \frac{1}{2 f_r \sqrt{\varepsilon_0 \mu_0}} \sqrt{2/(\varepsilon_r + 1)}$$

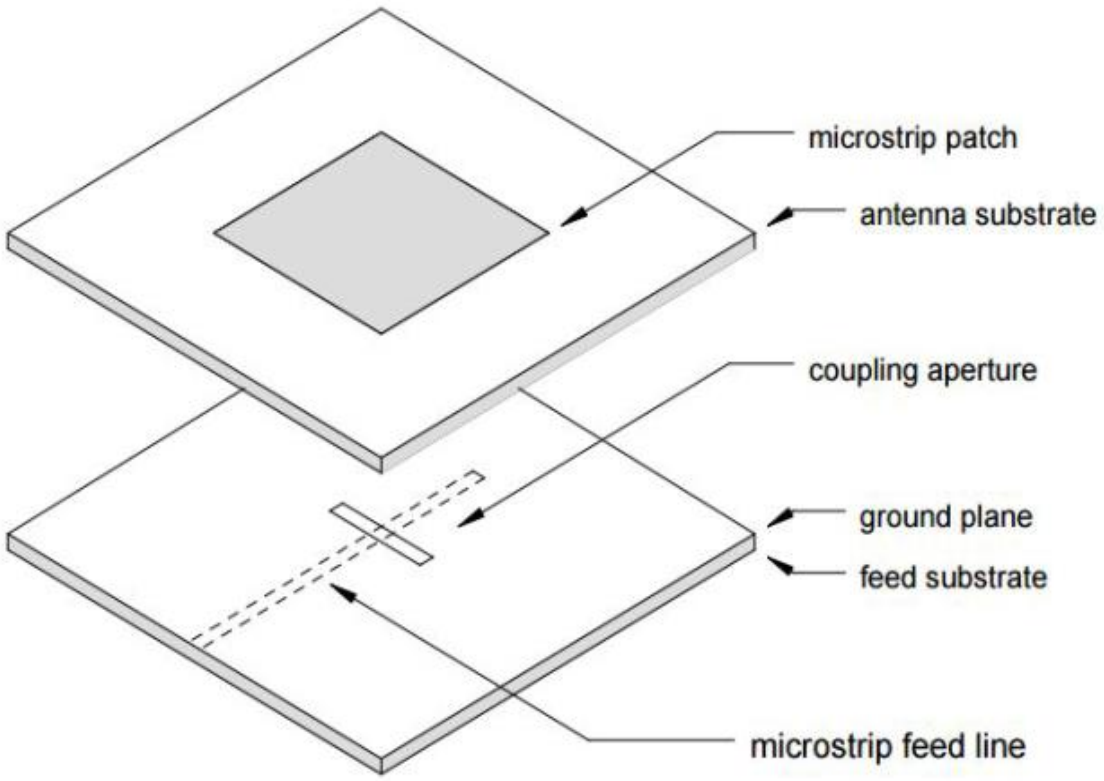

APERTURE COUPLED MICROSTRIP ANTENNA

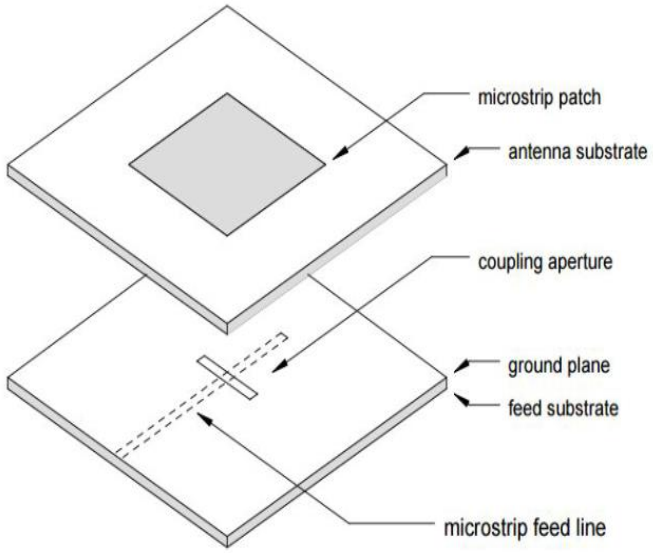

$$Z_0 = \begin{cases} \dfrac{60}{\sqrt{\epsilon_e}} \ln\left(\dfrac{8d}{W} + \dfrac{W}{4d}\right) & \text{for } W/d \leq 1 \\ \dfrac{120\pi}{\sqrt{\epsilon_e}\,[W/d + 1.393 + 0.667 \ln(W/d + 1.444)]} & \text{for } W/d \geq 1 \end{cases}$$

$$\epsilon_e = \frac{\epsilon_r + 1}{2} + \frac{\epsilon_r - 1}{2} \frac{1}{\sqrt{1 + 12d/W}}.$$

APERTURE COUPLED MICROSTRIP ANTENNA WITH DIELECTRIC LENS

PARAMETER	Dimension (mm)
L_{patch}	3
W_{patch}	3
L_{slot}	3.5
W_{slot}	1.7
$L_{subPatch}$	40
$W_{subPatch}$	40
$L_{subLine}$	45
$W_{subLine}$	40
L_{line}	25
L_{stub}	5.5
W_{line}	1.93
h_{patch}	1.52
h_{feed}	0.76
L_{lens}	35
r_{lens}	20

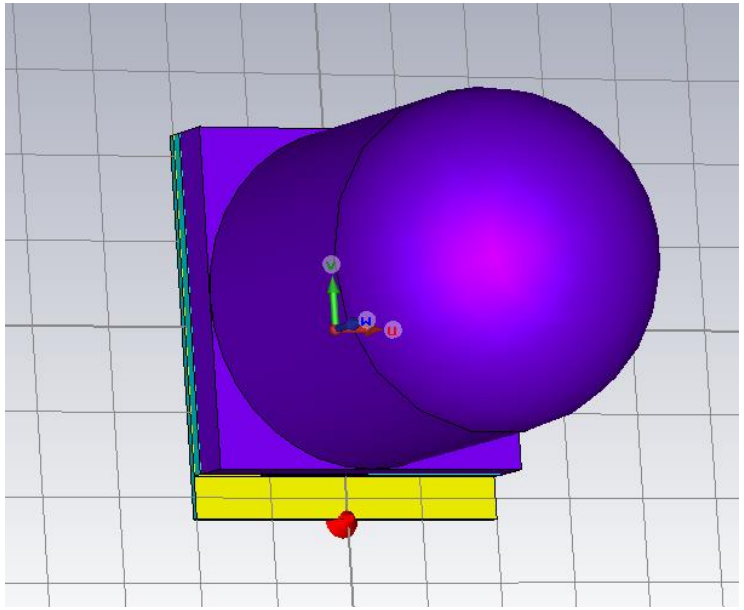

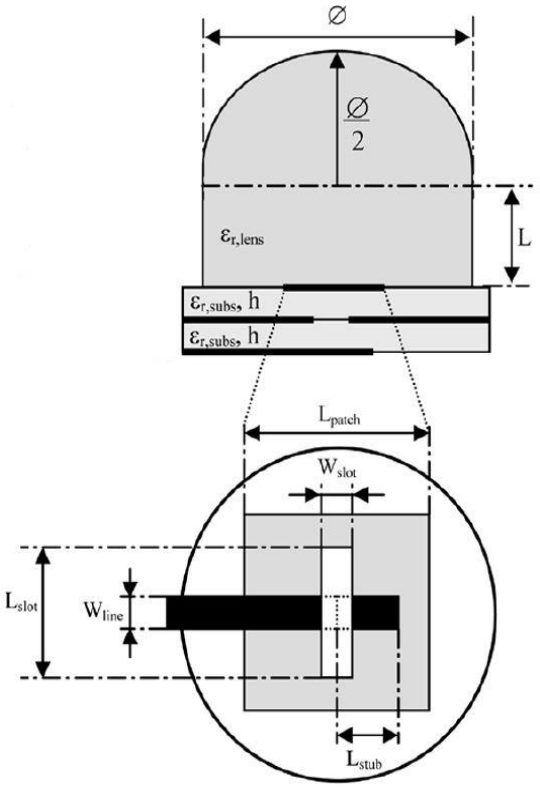

CST

APERTURE COUPLED MICROSTRIP ANTENNA WITH DIELECTRIC LENS

Return Loss

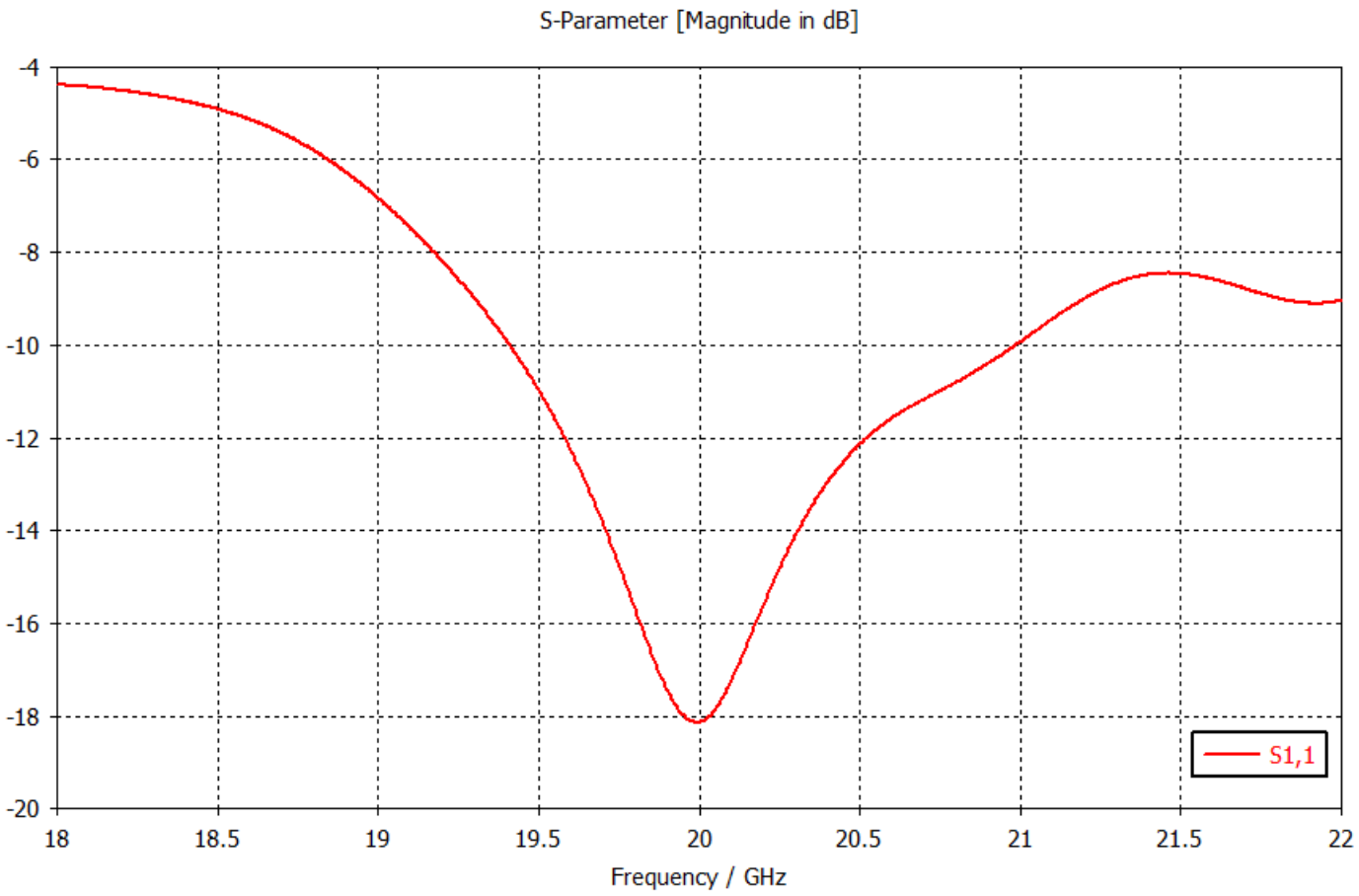

APERTURE COUPLED MICROSTRIP ANTENNA WITH DIELECTRIC LENS

Gain IEEE

Cartesian Plot

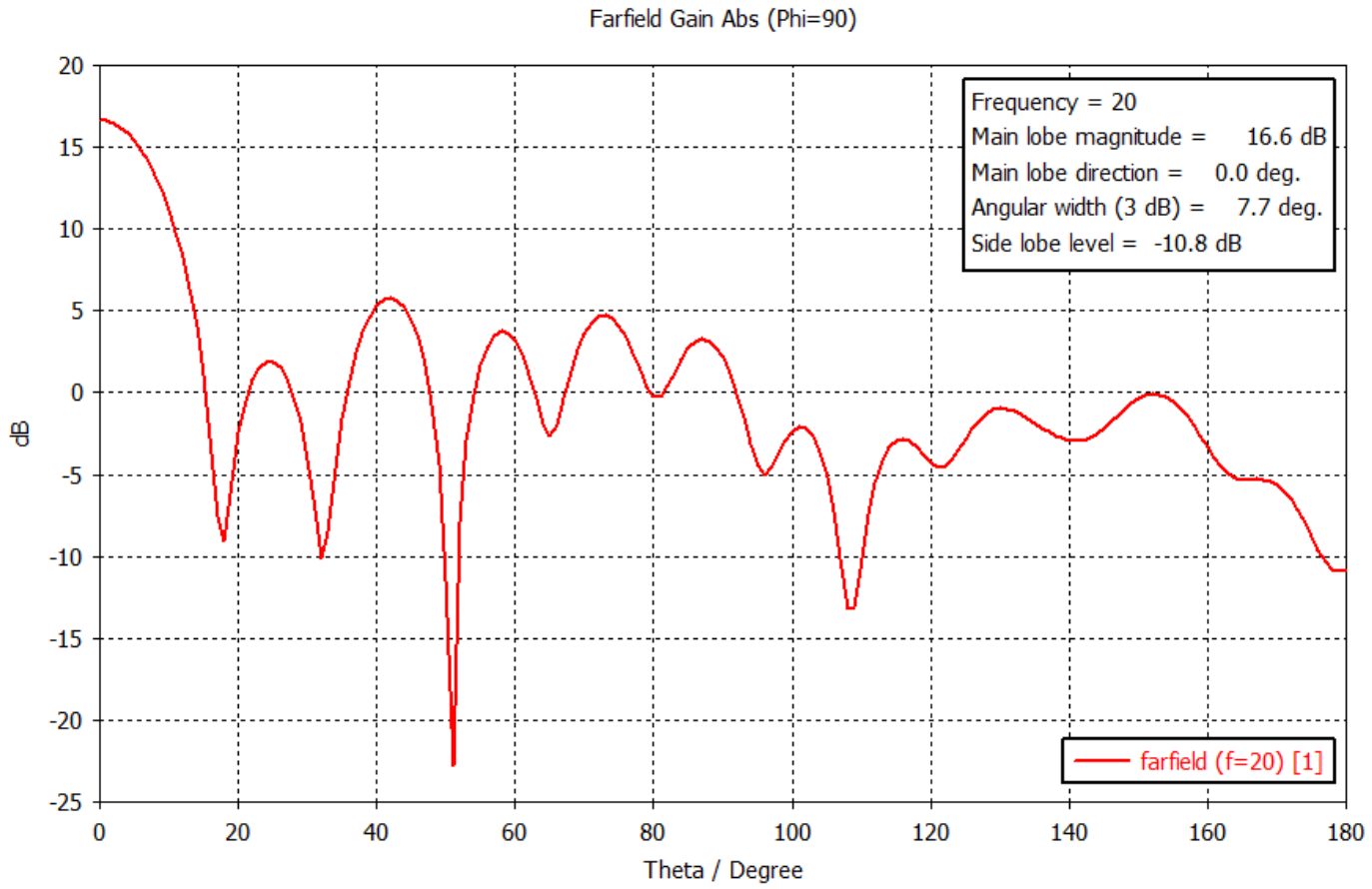

APERTURE COUPLED MICROSTRIP ANTENNA WITH DIELECTRIC LENS

Gain IEEE

3D Plot

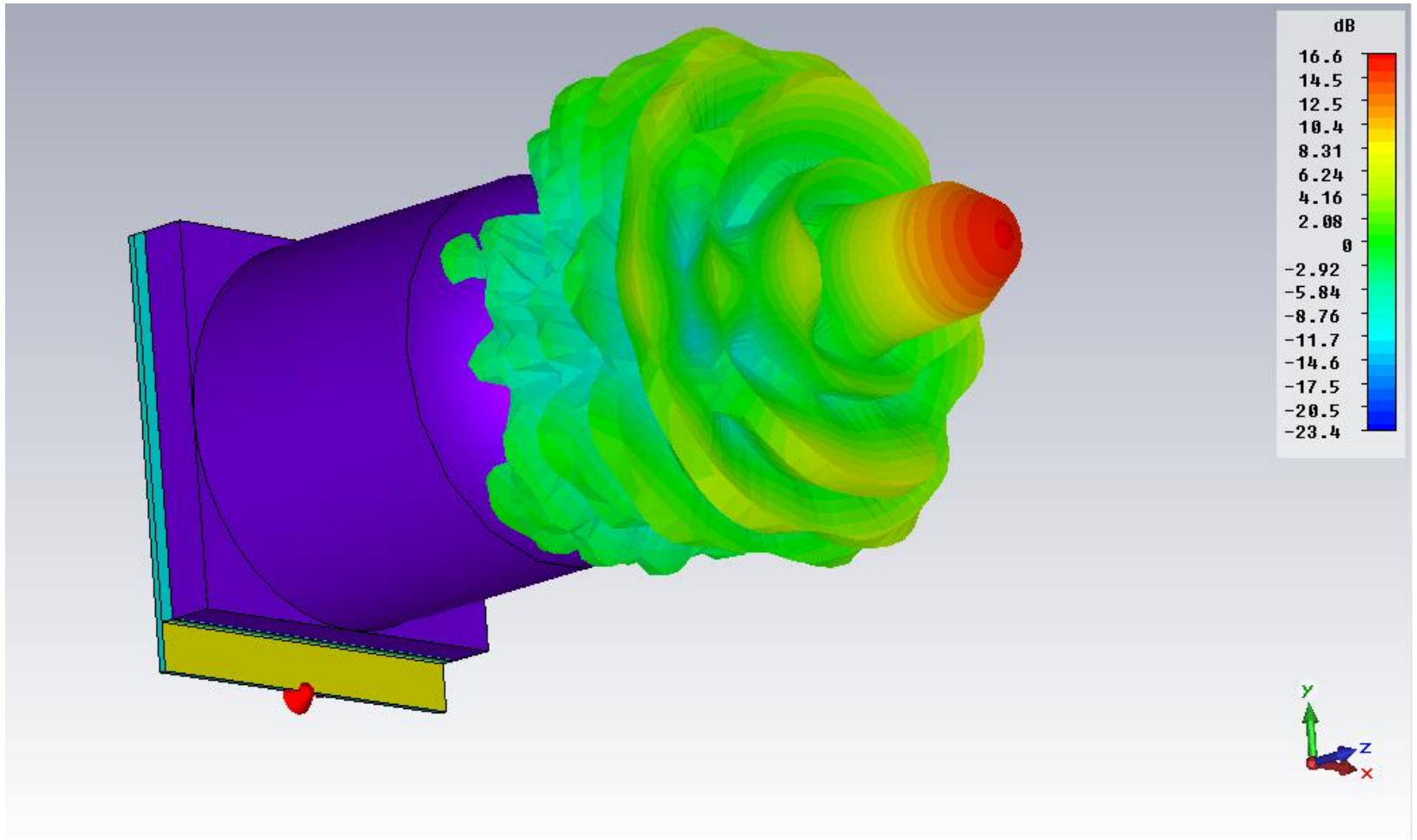

Lens

OpenSCAD
The Programmers Solid 3D CAD Modeller

lente.scad* - OpenSCAD

File Edit Design View Help

Editor

```
union(){

// base quadrada
difference(){

    cube([40,40,5]);

    translate([4,4,-1]){cylinder(10,1,1,$fn=50);}

    translate([36,4,-1]){cylinder(10,1,1,$fn=50);}

    translate([36,36,-1]){cylinder(10,1,1,$fn=50);}

    translate([4,36,-1]){cylinder(10,1,1,$fn=50);}

    };

// cilindro mais esfera
translate([20,20,5]){cylinder(30,20,20,$fn=50);}

translate([20,20,35]){sphere(r = 20,$fn=50);}

}
```

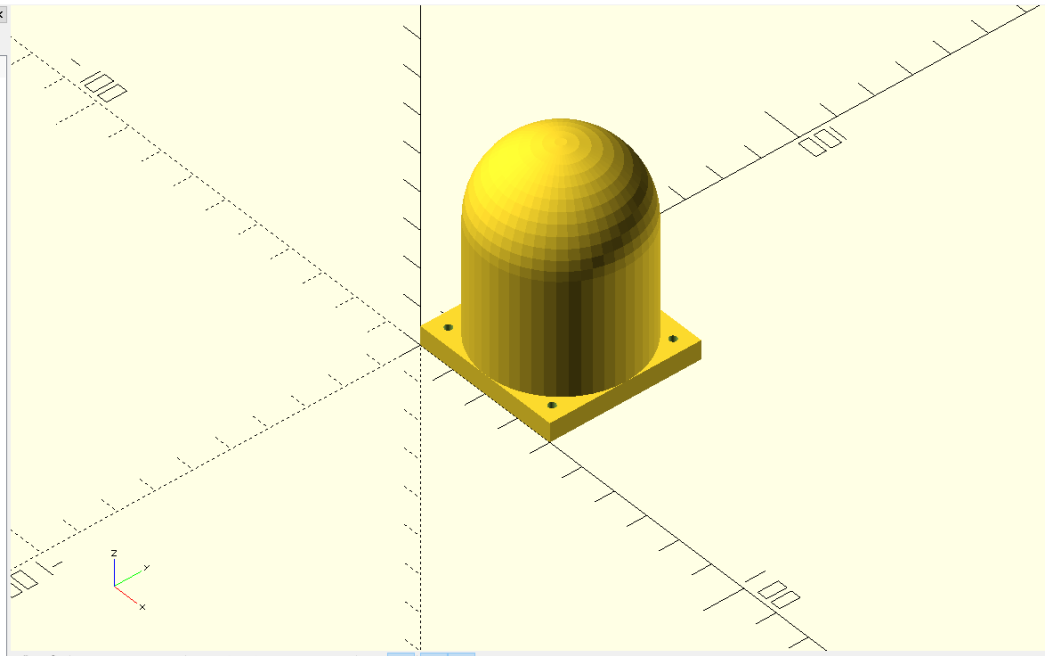

Console

```
Geometries in cache: 10
Geometry cache size in bytes: 402896
CGAL Polyhedrons in cache: 3
CGAL cache size in bytes: 4962864
Total rendering time: 0 hours, 0 minutes, 5 seconds
  Top level object is a 3D object:
  Simple:     yes
  Vertices:   1108
  Halfedges:  5080
  Edges:      2540
  Halffacets: 2868
  Facets:     1434
  Volumes:    2
Rendering finished.
```

Lens

BEE
THEFIRST

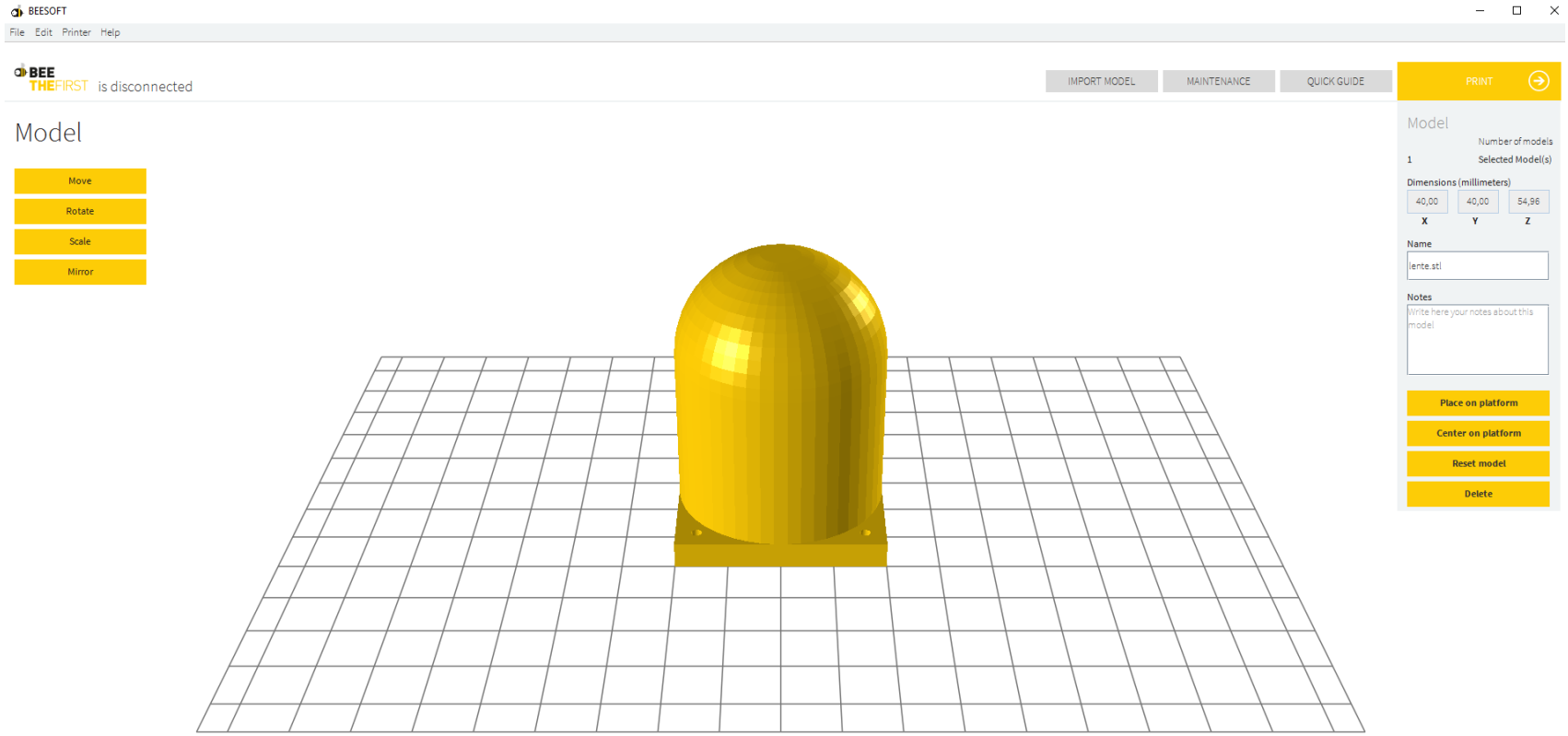
BEESOFT
File Edit Printer Help
BEE THEFIRST is disconnected
IMPORT MODEL
MAINTENANCE
QUICK GUIDE
PRINT
Model
Move
Rotate
Scale
Mirror
Model
Number of models
1
Selected Model(s)
Dimensions (millimeters)
40,00
40,00
54,96
X
Y
Z
Name
lente.stl
Notes
Write here your notes about this model
Place on platform
Center on platform
Reset model
Delete

APERTURE COUPLED MICROSTRIP ANTENNA WITH DIELECTRIC LENS

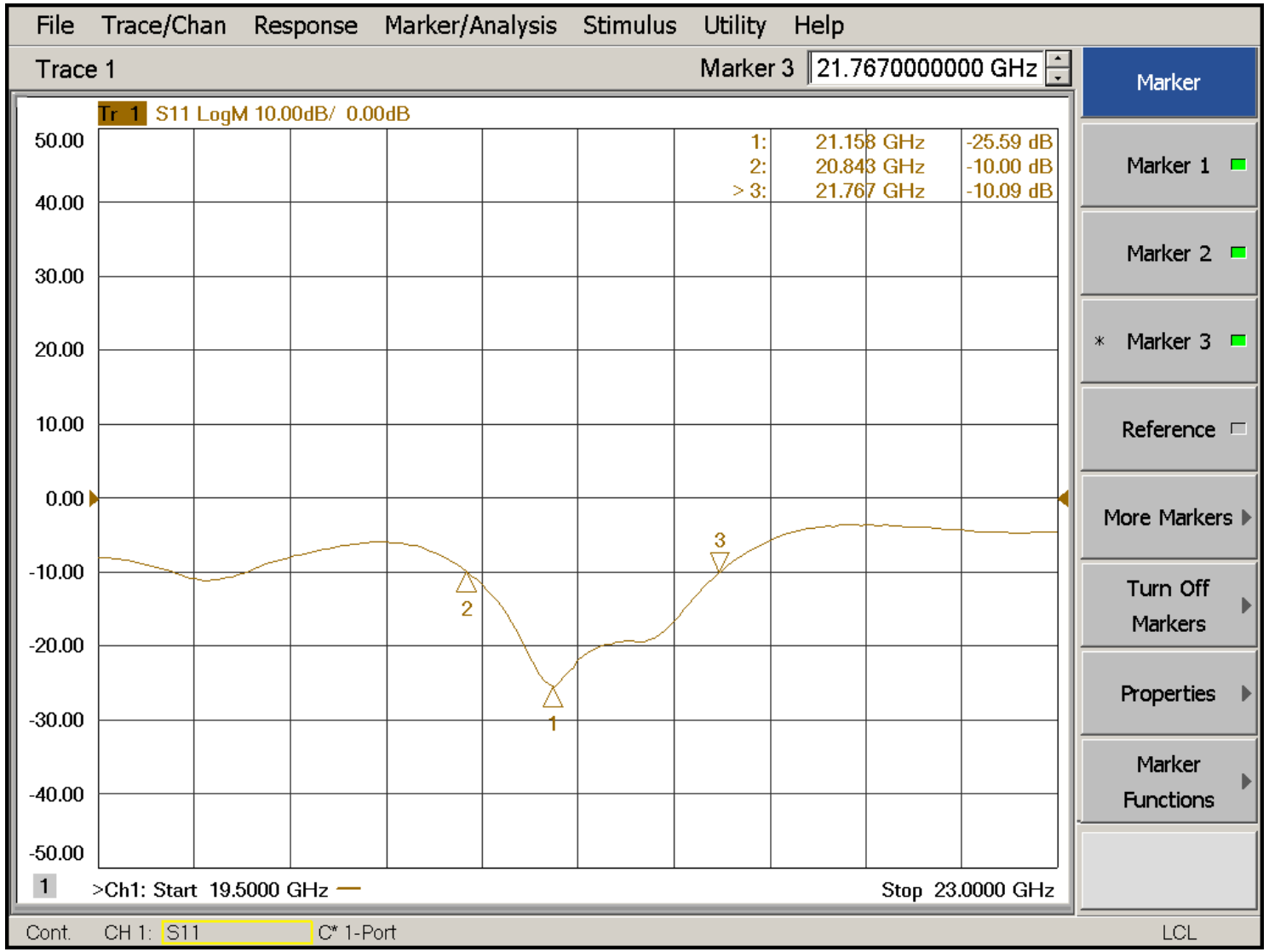

Questions