Photonics for Radioastronomy Applications

Rogério Nogueira (rnogueira@av.it.pt)

3º CONGRESSO DO COMITÉ PORTUGUÊS DA URSI
Radiocomunicações: da Terra ao Universo
Lisboa | 3 e 4.11.2009

instituto de telecomunicações

Outline

Photonics

RF over fiber

Photonics Beamforming

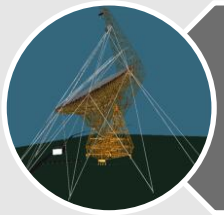

Structure monitoring

Photonics ?

"Photonics" comes from "photon" which is the smallest unit of light. Photonics is the **generation**, **process** and **manipulation** of **photon** to achieve a certain function. With **photonics** we **manipulate** the **power** (loss/gain), **phase**, **polarization** and **wavelength** independently.

Key advantages: low electromagnetic interference, ultra high bandwidth

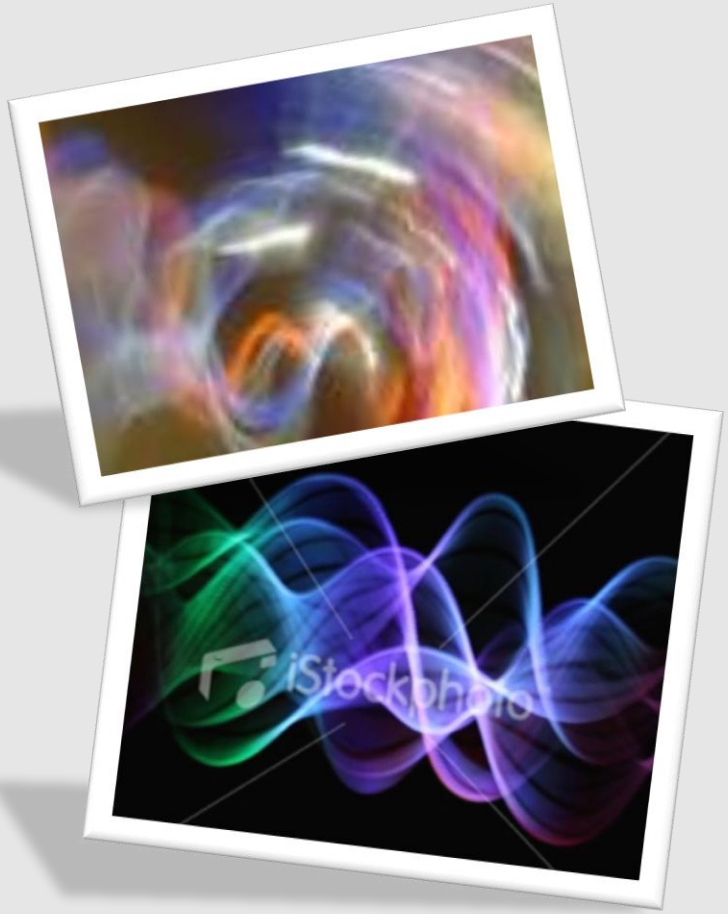

How can photonics help radio astronomy ?

instituto de telecomunicações

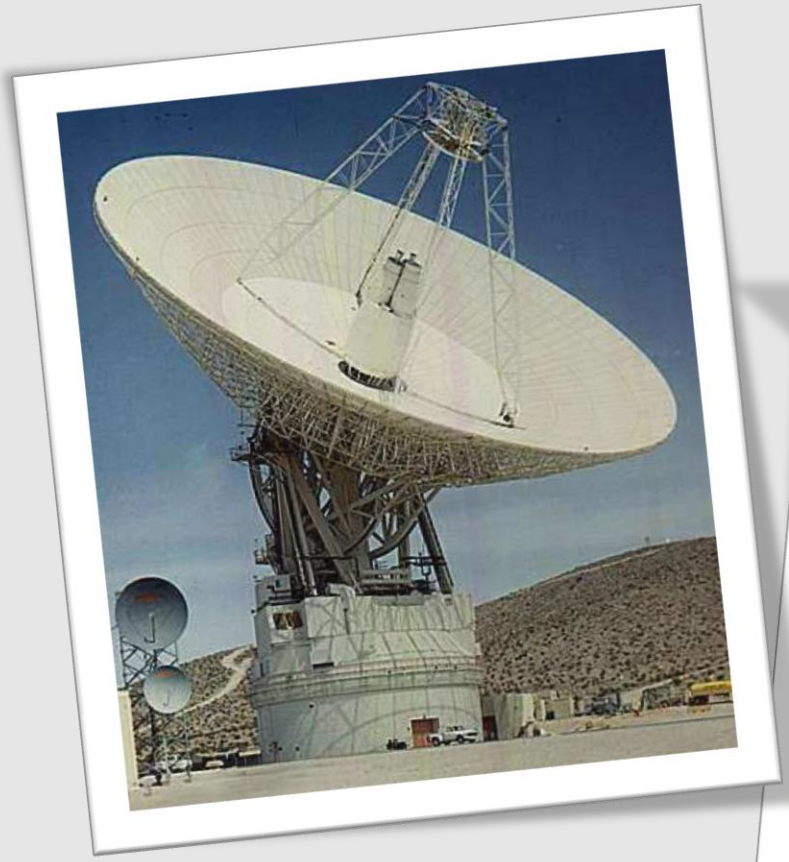

RF over fiber

Radio telescopes, generic

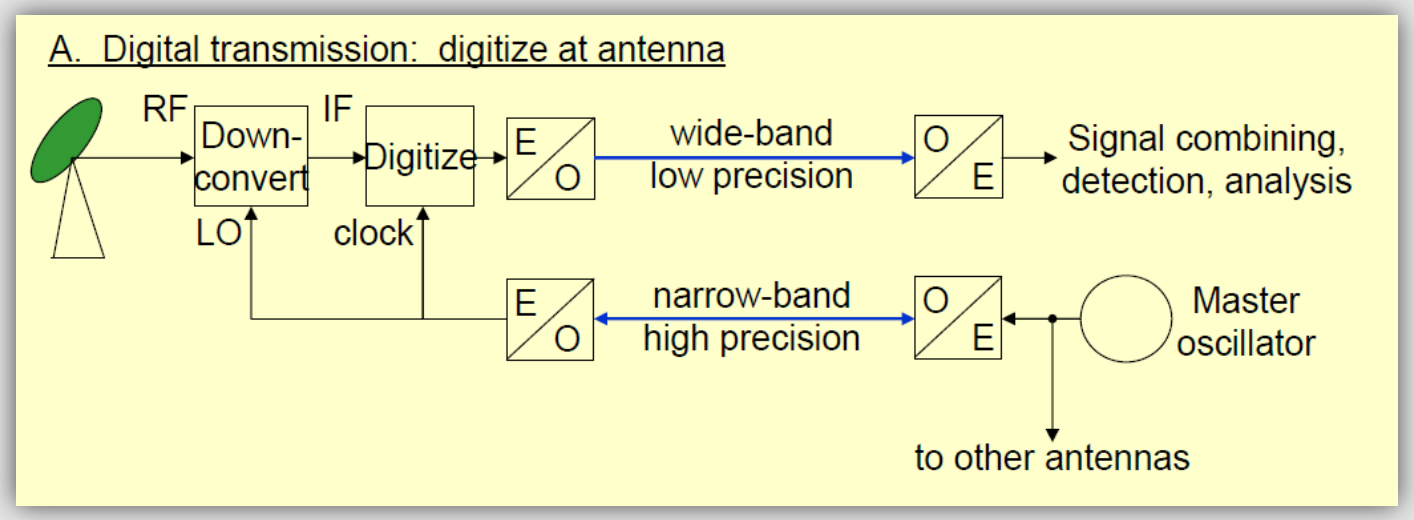

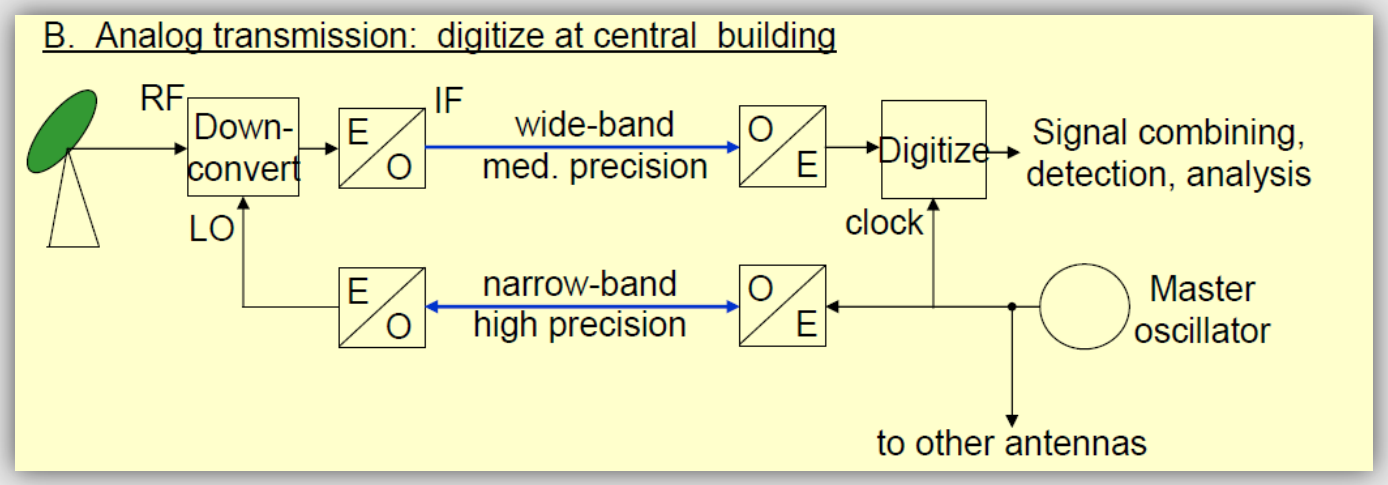

Radio telescopes, generic

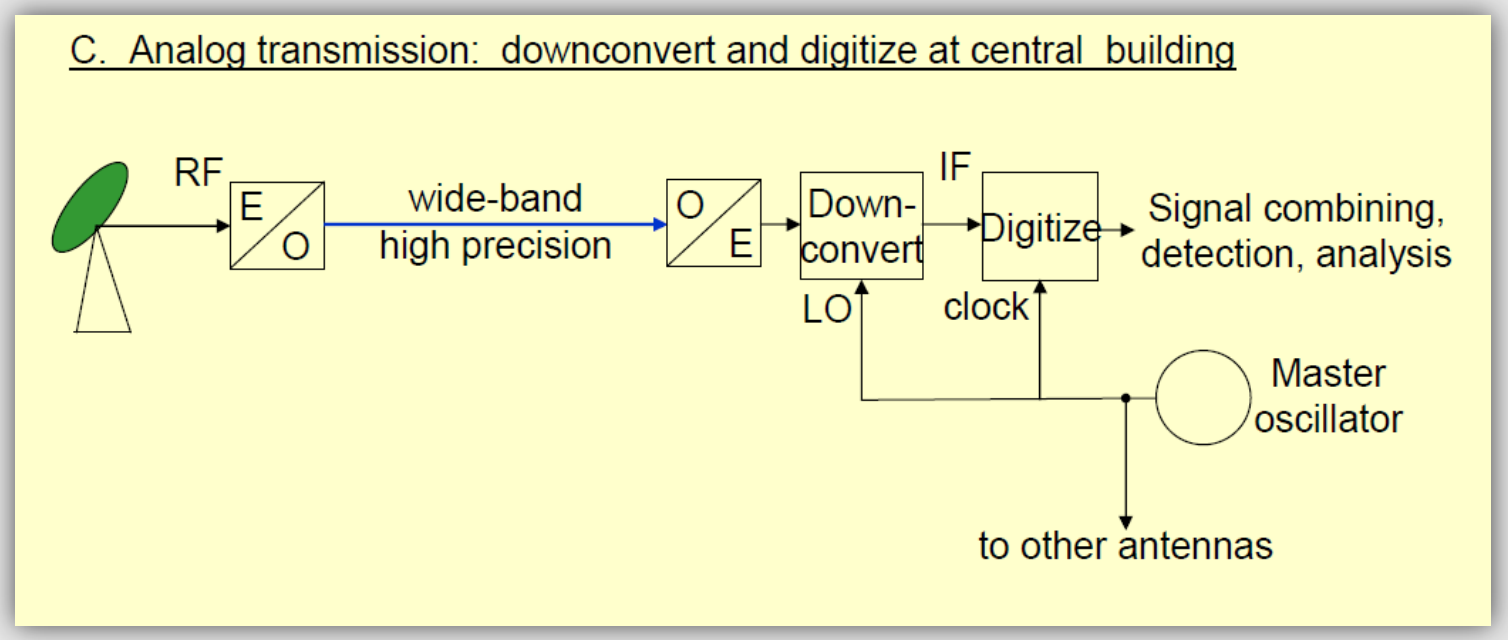

RF over Fiber Benefits

- Why Fiber? - Advantages
  - Transports signals in native RF format, complex circuitry at remote location
  - Thin cable size, very low cable weight
  - Range, bandwidth and RF performance
  - Low noise figure, high dynamic range
  - No signal egress (security)
  - EMI/RFI Immunity (interference)
  - Isolation from lightening strikes
  - High frequency, low signal loss
  - Flexible system configurations

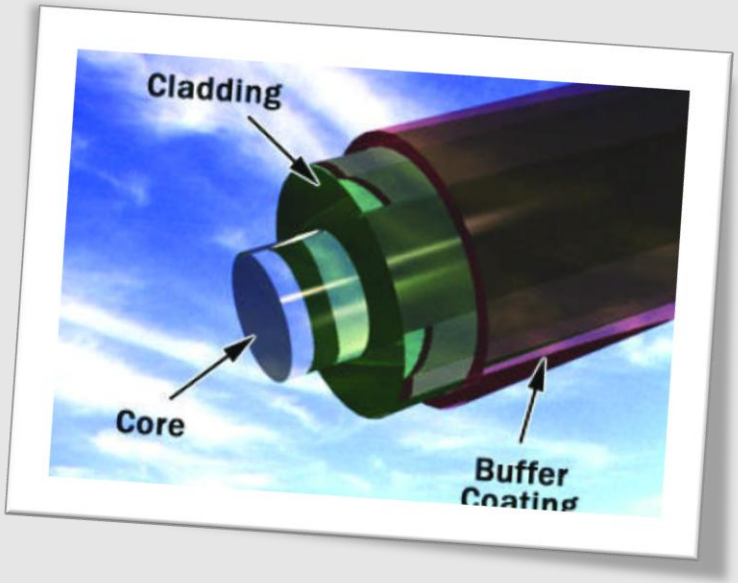

RF over Fiber Applications

instituto de telecomunicações

Wireless Networks

Radio

Satellite

GPS

Broadcast

Tunnels-Subways

In-Building Distribution

Highways

RF over Fiber Systems in Radioastronomy

Smithsonian Project

- 5 GHz IF (200 GHz RF band)
- WDM Fiber links for timing signal

NRAO, Allen (SETI)

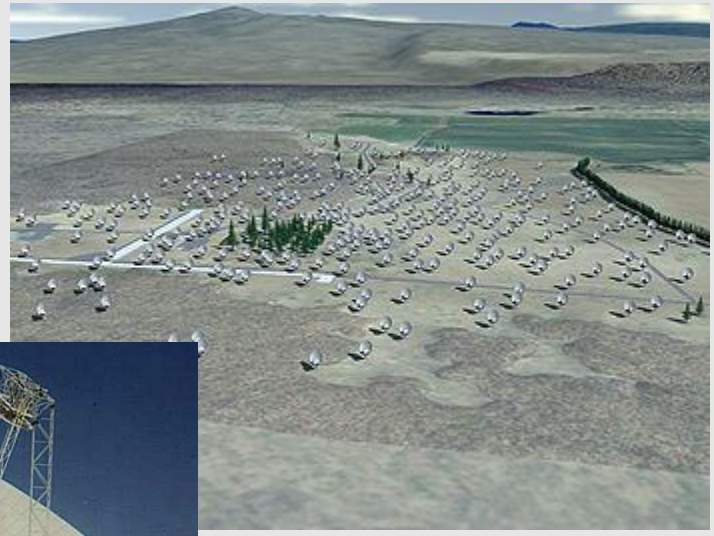

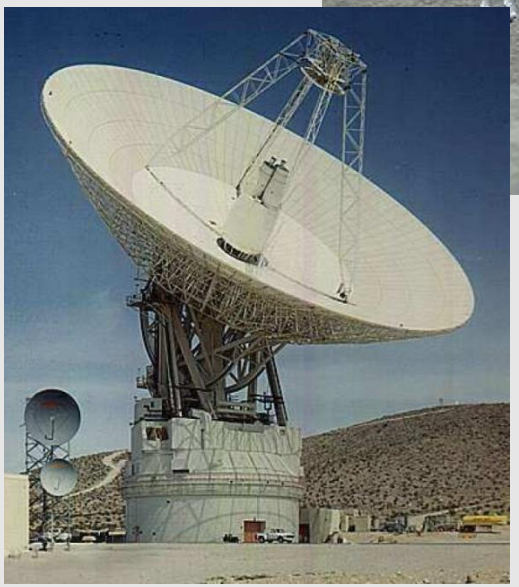

Transport

Transport

- An optical fiber has potentially dozens of THz available for transmission.
- 640 Gbit/s has already been demonstrated in one single channel.
- Has low attenuation (0.2 dB /km): enables ultra-long haul transmission;
- Relative low cost (≈36 € / km)

WDM: wavelength division multiplexing

– Transmission of several λs

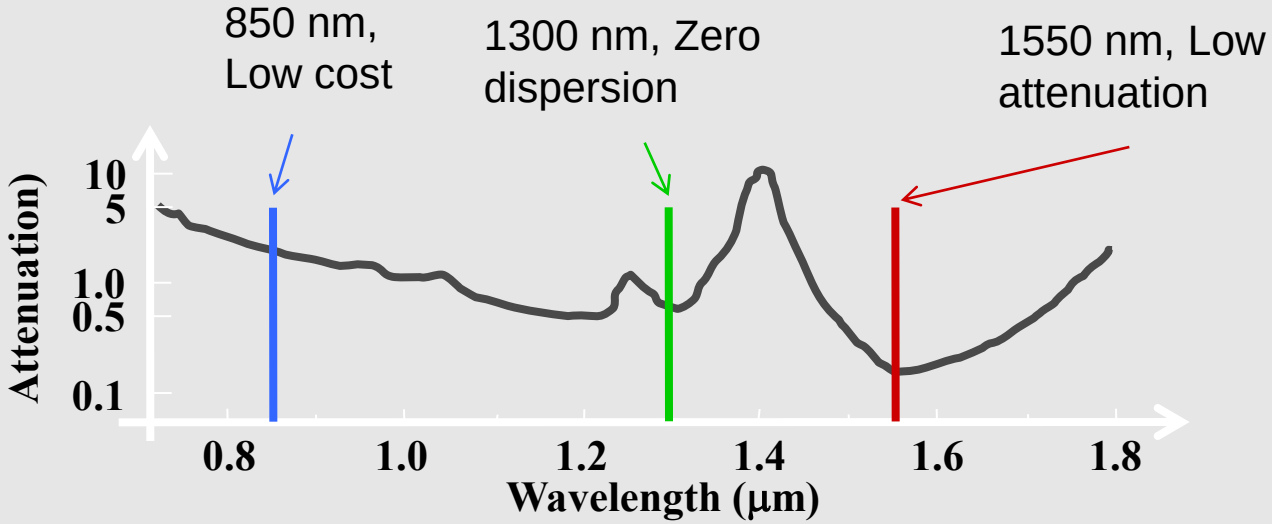

Historical Evolution of Fiber-Optic Systems Capacity

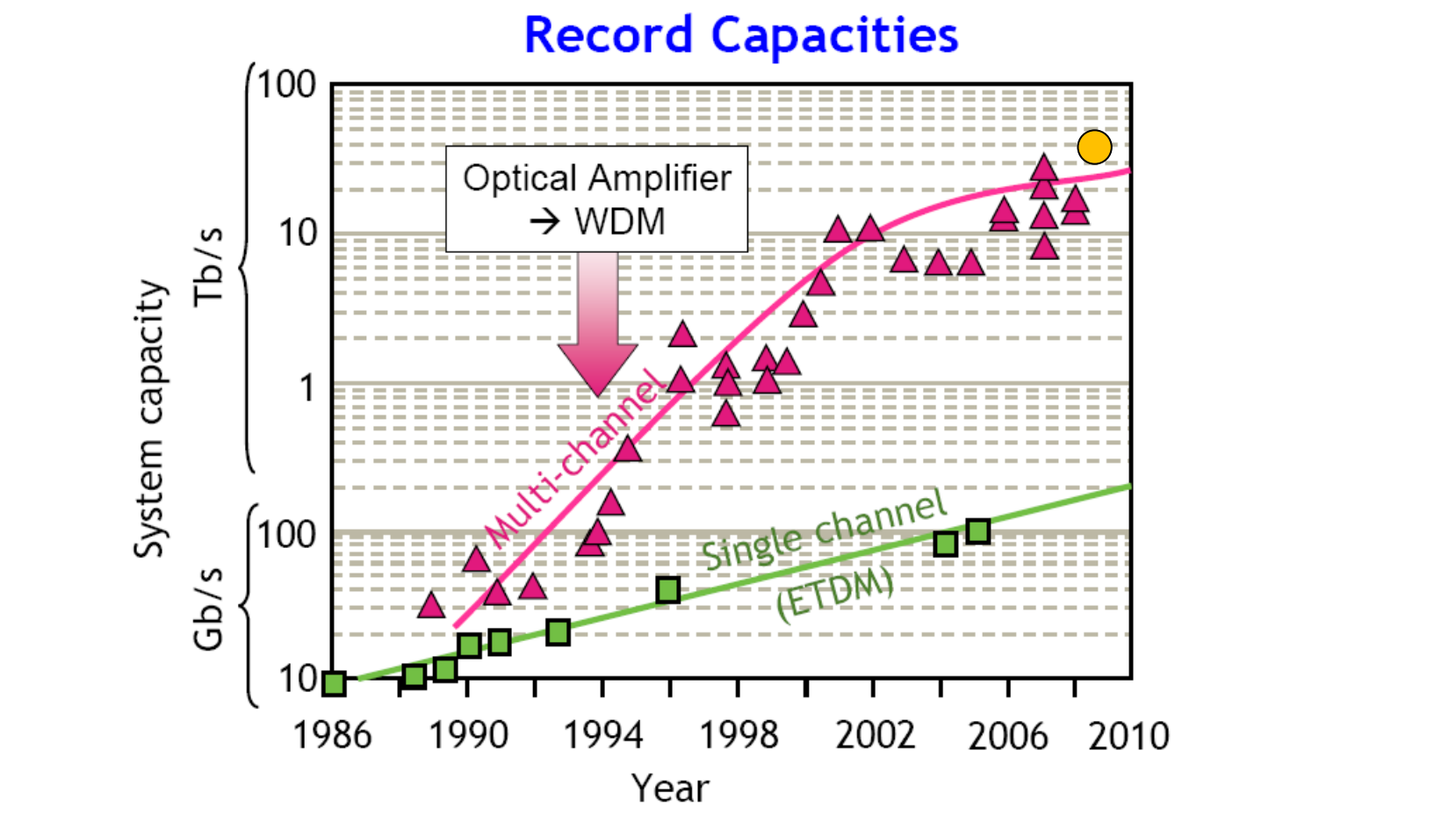

Source: OFC 09 Tutorial (René-Jean Essiambre, Gerard Foschini, Peter Winzer and Gerhard Kramer)

32 Tb/s (320x114Gb/s) PDM-RZ-8QAM transmission over 580 km of SMF-28 ultra-low-loss fiber, OFC 09, Post deadline paper (PPDPB4)

Photonics beamforming

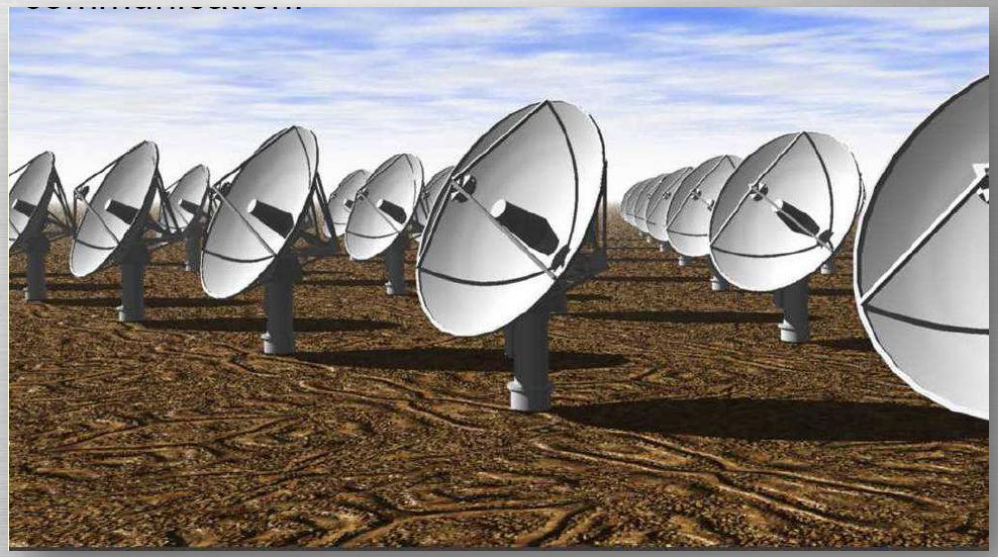

Phased Array Antennas (PAAs)

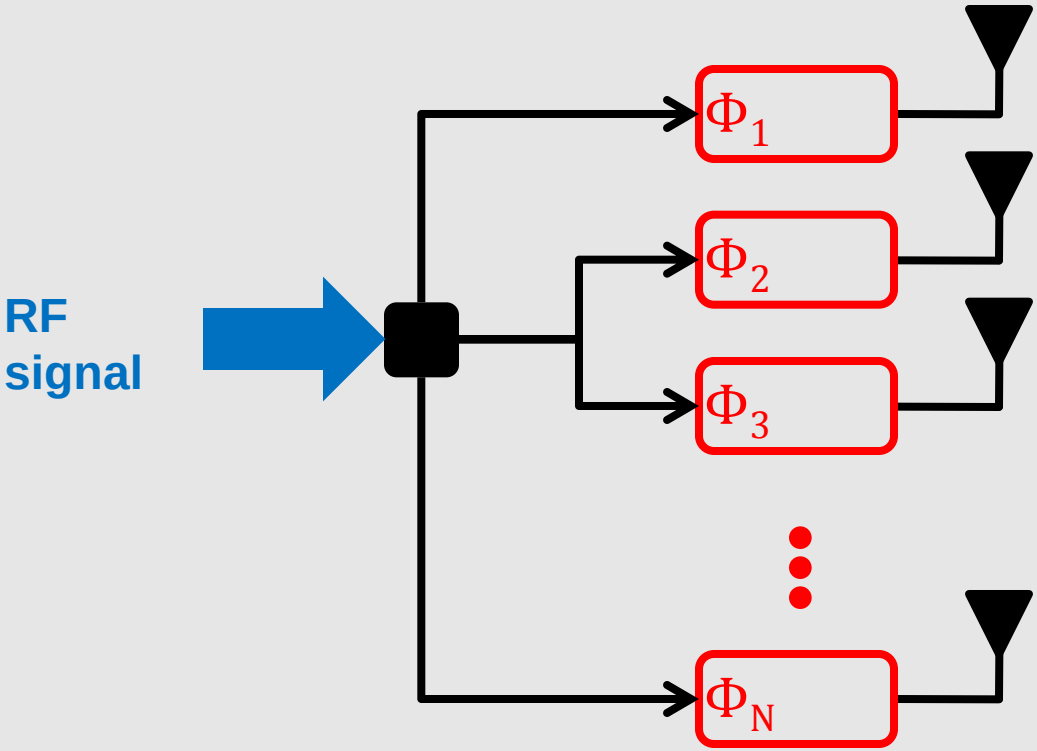

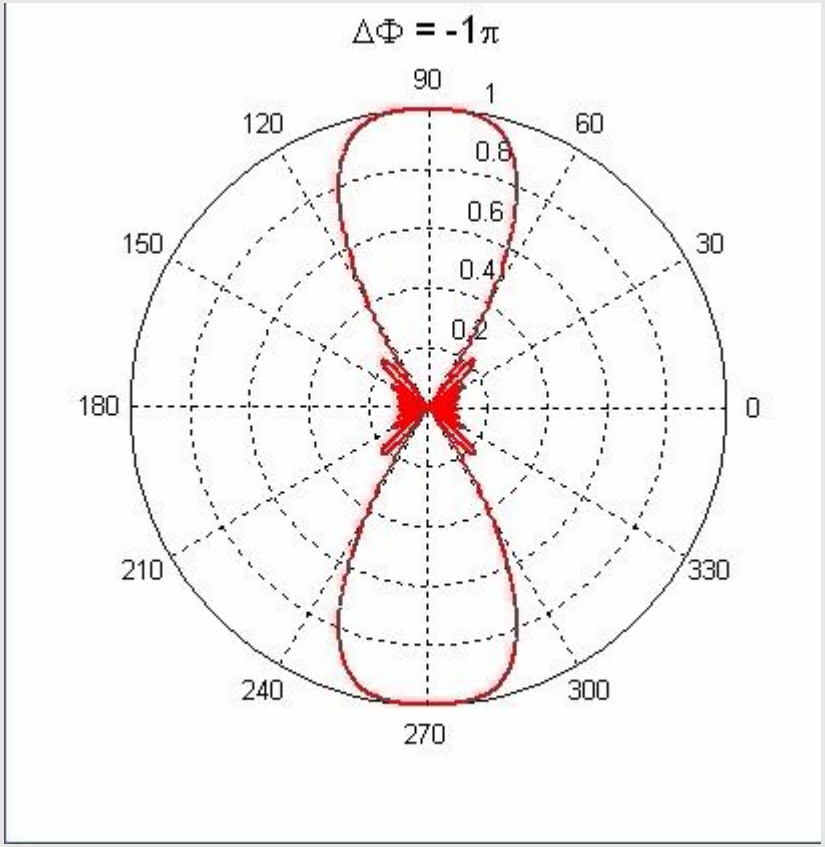

Beam squinting

- Constant phase shifts are correct only for the RF carrier frequency.
- For any frequency deviation, the beampoiting angle diverges from the intended value.

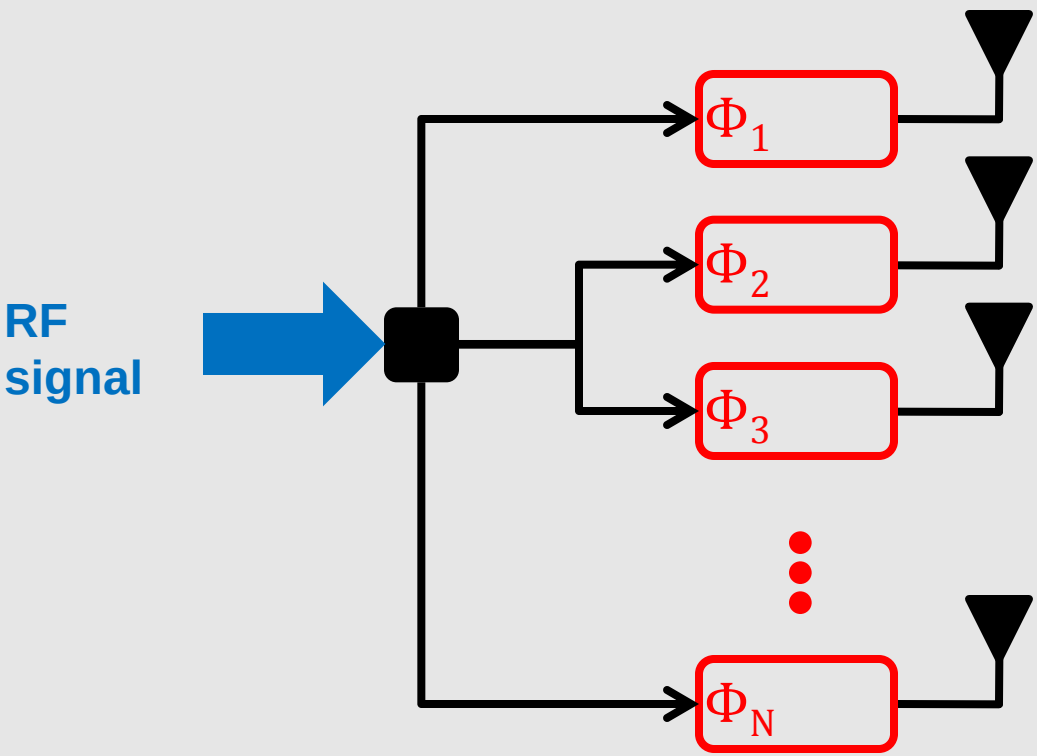

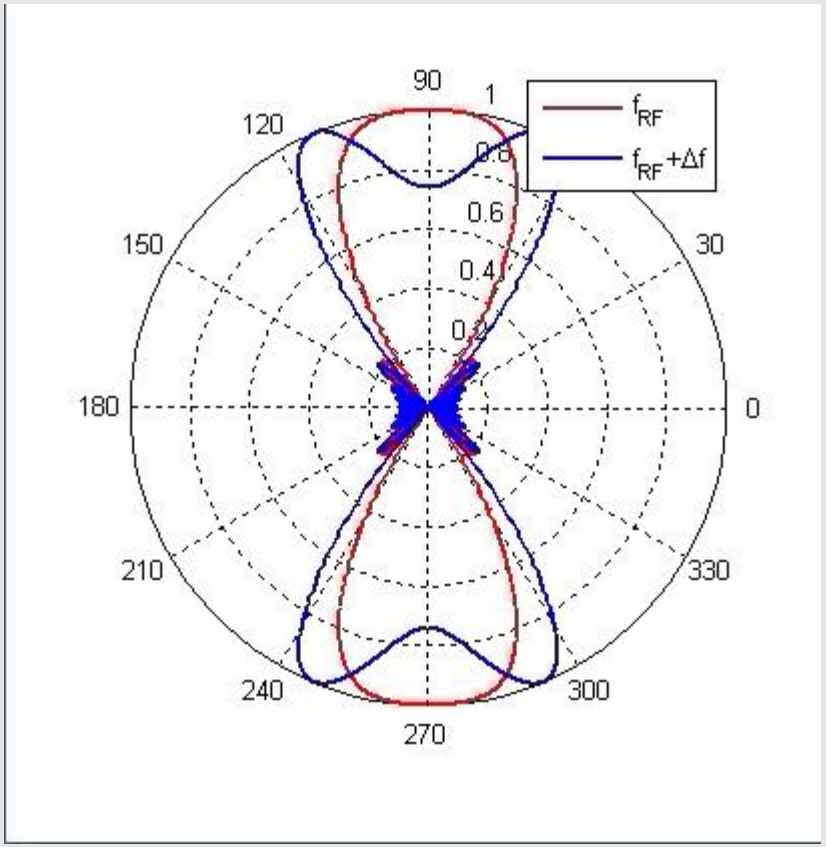

True-Time Delay Beamforming

- Beam squinting is eliminated when the phase shifts are frequency dependent.
- Frequency-dependent phase shifts are time delays.

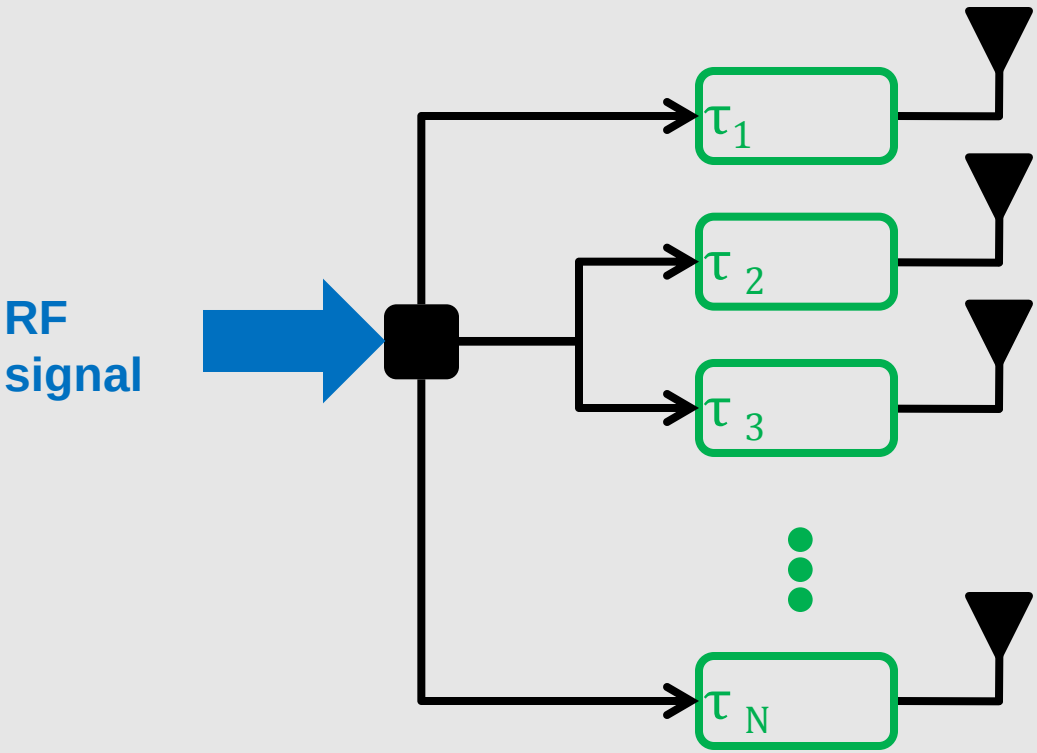

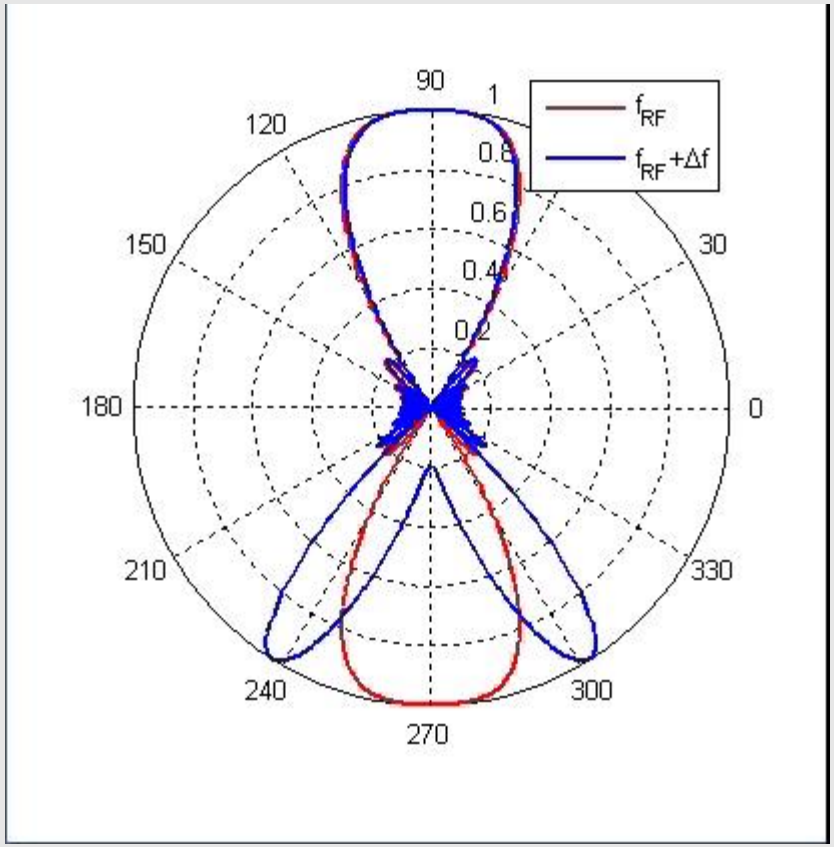

Photonic True-time delay lines

- Fiber optic delay lines present many advantages in comparison to RF cable-based delay lines:
  - small size, low weight, immunity to electro-magnetic interference and wide instantaneous bandwidth.

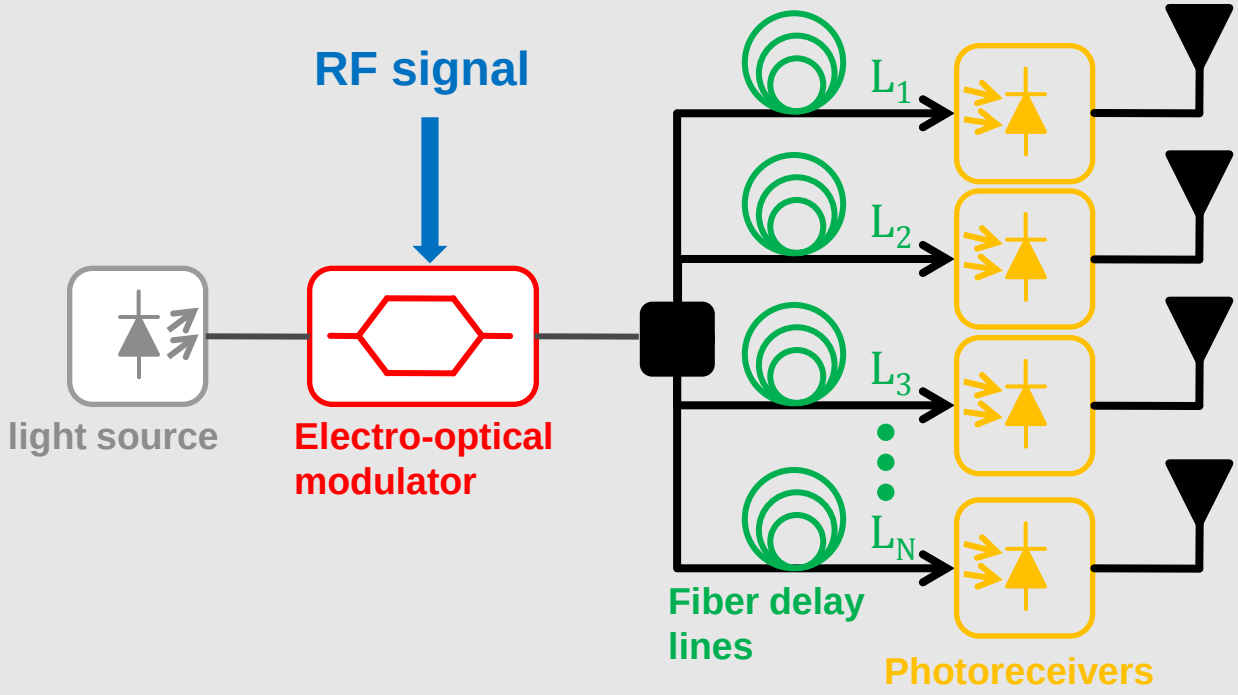

Multiwavelength Photonic TTD technique

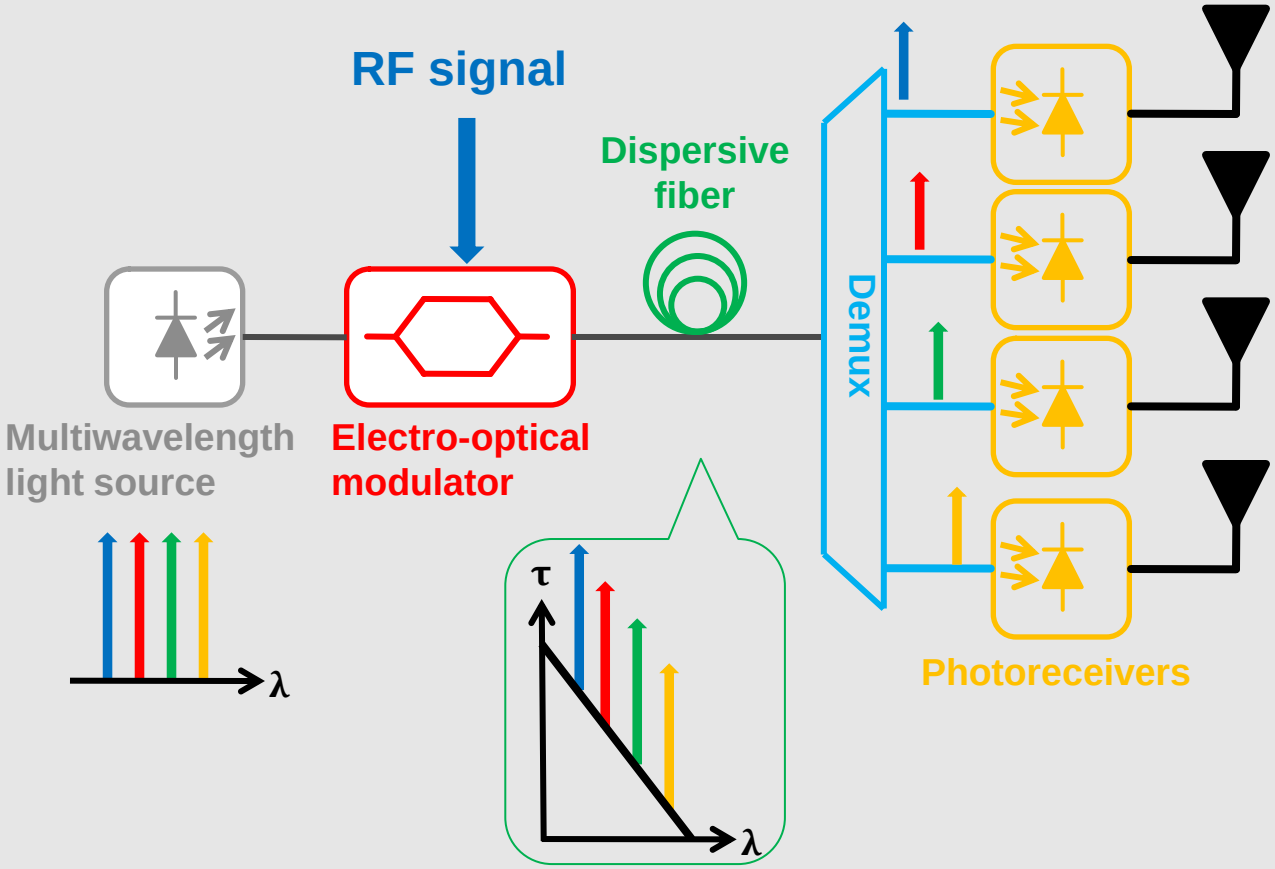

Structure monitoring

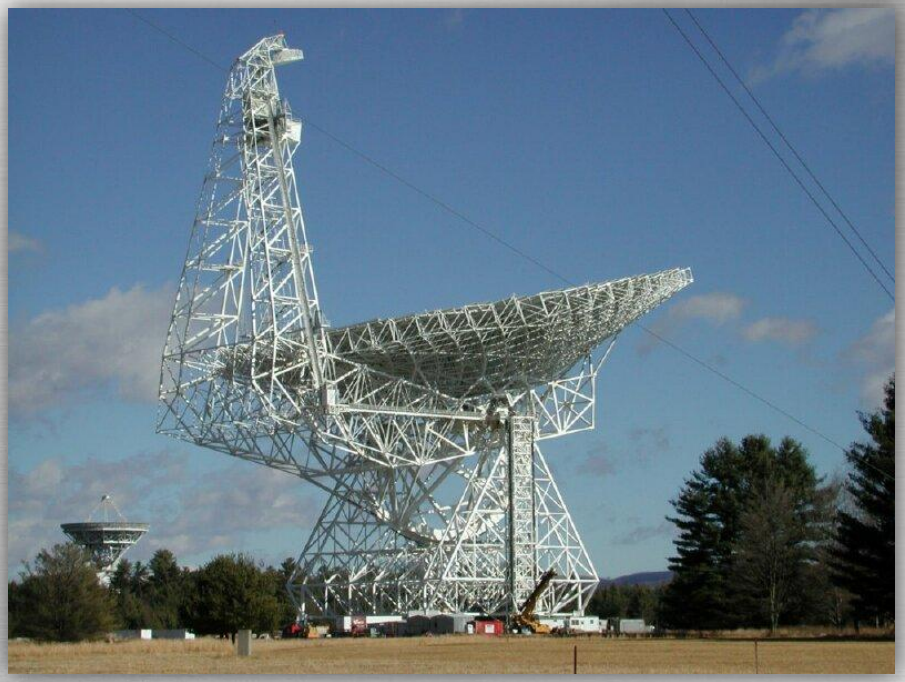

Structure monitoring

Green Bank telescope, WV, USA
- 18 lasers
- Accuracy: 50 um
- 2209 corner cube retro-reflectors

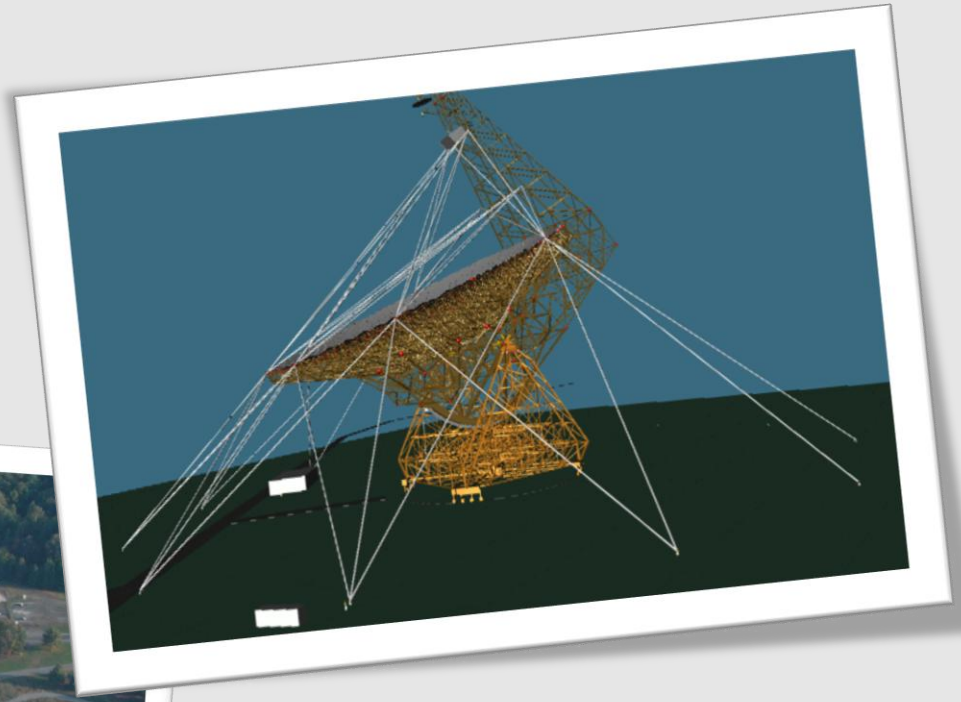

Fiber monitoring: advantages

- Sensitivity: Strain up to 0.001%. Temperature up to 0.1º C,
- insensitivity to electromagnetic interference,
- freedom from sparking electrostatic discharge,
- high signal to noise ratio for high measurement accuracy,
- lightweight and flexible harness that can result in significant mass savings,
- flexible sensor distribution at remote locations in the structure,
- efficient multiplexing for high sensor capacity,
- low power requirements per sensor,
- multi-parameter sensing,
- potential to embed in composite structures

Summary

- Photonics technologies and devices are now in a mature state due to the exponential growth of internet.
- These technologies can be used successfully in radio astronomy applications.
- The main applications are: radio over fiber, transport, beam forming and structure monitoring.

Thank you for your attention !

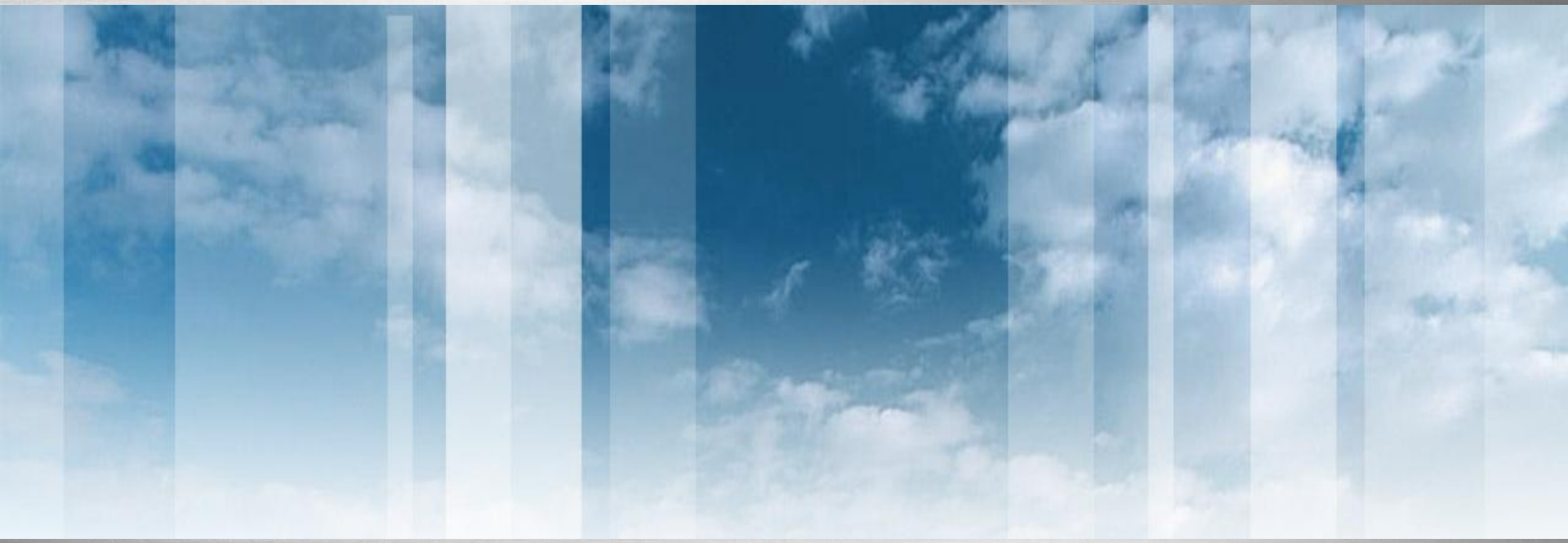

Rogério Nogueira (rnogueira@av.it.pt)