11.º Congresso do Comité Português da URSI
Lisboa, 24 de Novembro de 2017

In house development of 17GHz antennas: potentialities and difficulties

Antennas for indoor/outdoor Wi-Fi applications at the 17 GHz band

Author:
Michael Duarte (michael.duarte@ua.pt)

Co-authors:
Tiago Varum
João Matos (supervisor)
Pedro Pinho (co-supervisor)

© 2014, it - instituto de telecomunicações. Todos os direitos reservados.

INSTITUIÇÕES ASSOCIADAS

TÉCNICO LISBOA
universidade de aveiro
UNIVERSIDADE DE COIMBRA
altice labs
nsn Nokia Solutions Network
UNIVERSIDADE BEIRA INTERIOR
U.PORTO
ISCTE IUL Instituto Universitário de Lisboa
IPL instituto politécnico de leiria

instituto de telecomunicações

Outline

- Introduction
- Objectives
- Technical approaches for antenna design
- Design of aperture coupled MSA with crossed slot
- Design of aperture coupled MSA with off-centered feed
- Conclusions

Introduction

- **Wi-Fi** is a technology that provides the user **freedom and flexibility** to move around within a certain area and keep its connection.

- It is being widely used in **homes**, **hotels** and **public places**.

The Wi-Fi technology is known for being cheap to build/implement and free of fees, because it operates in the ISM (industrial, scientific, and medical) band, particularly in the bands of 2.4GHz and 5GHz.

Introduction

The **wireless traffic in the ISM bands has exponentially increased** due to its extensively use and due to **the increase of devices** with Wi-Fi capabilities, leading to **interferences and congestion** of the Wi-Fi networks, significantly reducing the quality of service provided to the users.

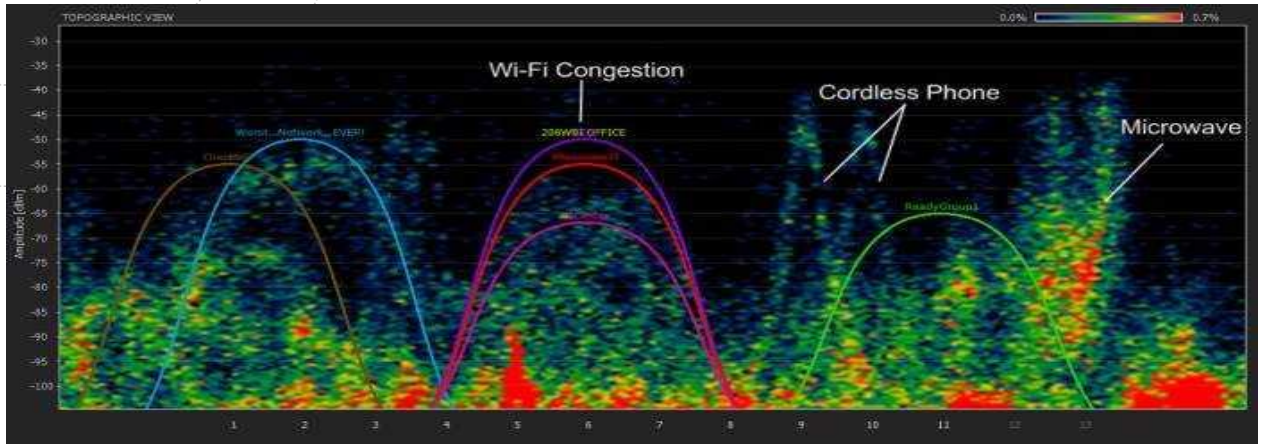

It is necessary to **reduce the cell size** or deploy a network to **another frequency band**.

Possible solution: new frequency band

At **17GHz** it is possible to achieve **higher bandwidths** that lead to higher bit rates.

Objectives

Antennas have been constantly studied to improve the range of coverage, increasing the gain, directivity and bandwidth to meet the demands of the users.

this paper is focused in the antenna element of the Wi-Fi communications system.

The **study and design of antennas operating in a new range of frequencies**, at the 17 GHz band, can add value to the progress of the wireless networks.

The design steps and the simulation results of two possible antenna solutions for this application are presented.

Objectives

The goal is to develop antenna for Wi-Fi at the 17 GHz

The desired **antenna characteristics**

- Compact
- wide bandwidth
- circular polarization
- high isolation (for polarized antennas) between the orthogonal components

Technical approaches

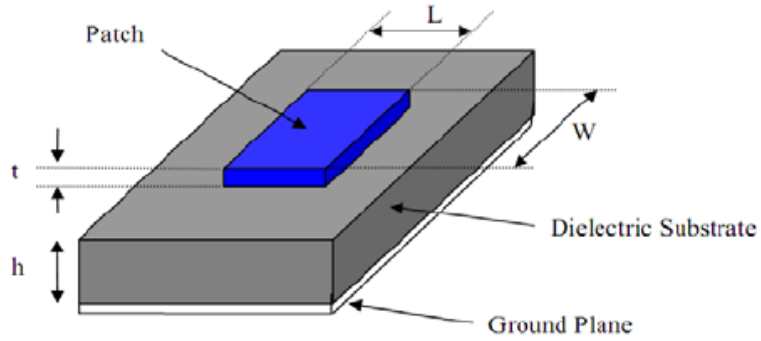

The **microstrip antennas** have important features that fits to the modern wireless communication systems.

Simplicity
Low profile
High versatility

Compactness
Low cost
Easiness to manufacture

- The substrate used was the Rogers RO4725JXR with thickness h=0.78mm, dielectric constant εr=2.55 and a loss tangent tgδ=0.0026.
- The electromagnetic simulations were performed on CST Microwave Studio.
- One of the **main difficulties** designing of antennas at 17 GHz is **their feeding** due to their small size.
- The **aperture coupling method** is the best approach for this application because this method presents a higher bandwidth.

Technical approaches

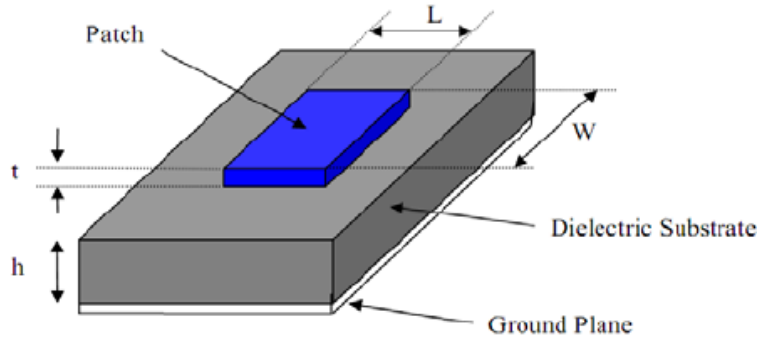

The **use of circular polarization** is a requirement, to **improve the reliability of the communications of Wi-Fi applications independently of the direction** of the source.
The **generation of circular polarization** using microstrip antennas can be done easily through **some modifications in the feeding structure**.

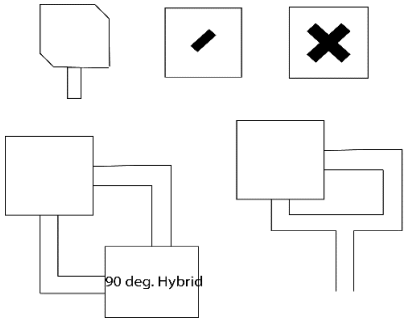

- **two orthogonal non-overlapping slots** in a square patch using a 90º hybrid coupler, also known as off-centered slot feed.

- **crossed slot configuration**, formed by a single microstrip feed placed diagonally to the cross

Design of aperture coupled MSA with crossed slot

The **crossed slot is centered with the quadrangular patch** (width and length of the patch are equal), and shifted 45º with respect to the microstrip feedline.

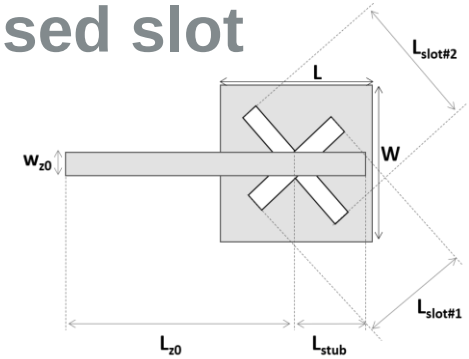

- The **operating frequency** of the antenna depends on the **slot length**.
- The width of each slot was set to be 10% of the corresponding slot length.
- The **ratio between the length of the slots** (Ks) has a major **impact on the axial ratio**.

Parameter	W	L	L_a	K_s	W_{z0}	L_{z0}	L_{stub}
Dimension (mm)	4	4	3.65	1.15	0.55	12	2.1

$$K_S = \frac{L_{Slot_1}}{L_{Slot_2}}$$

$$L_{Slot_1} = \frac{2L_a}{K_S + 1}$$

$$L_{Slot_2} = \frac{2L_a K_S}{K_S + 1}$$

- The primary step was to **find the aperture average length (La)** that led to a good amount of coupling. It was set to 3.65mm.

- Then the **slot ratio** that allows to achieve a good polarization level **was found to be between 1.1 and 1.2**.

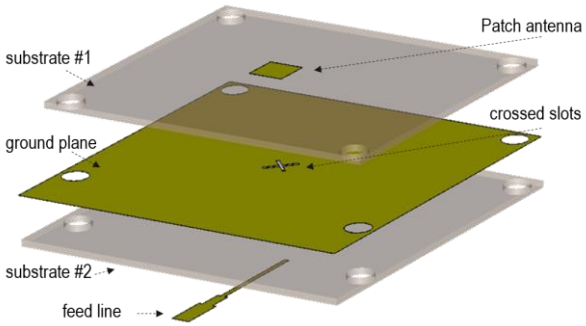

Design of aperture coupled MSA with crossed slot

- The antenna has an S11 of -25.94dB (at 17GHz) and a **bandwidth of 2.3GHz**.
- The antenna shows an axial ratio of 0.56dB (at 17GHz) with an **AR bandwidth about 500MHz**.
- In terms of the circular polarization, it is possible to verify that the antenna presents a **Right Hand Circular Polarization** (RHCP) with a left-hand component **rejection of 29.86dB**.
- The **gain is 5.32dBi** in the boresight direction.

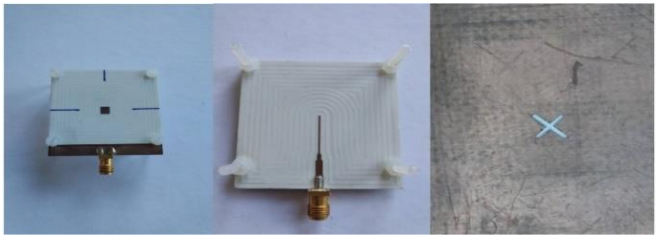

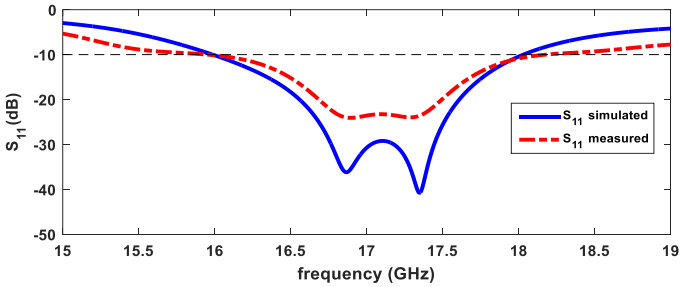

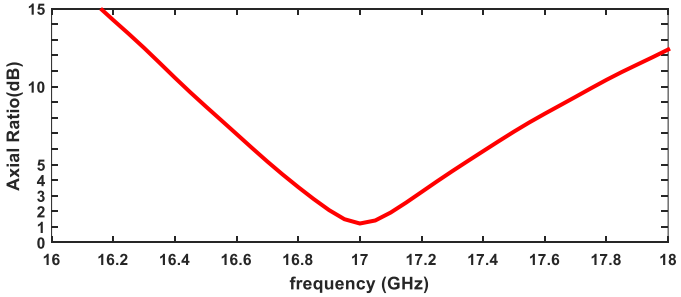

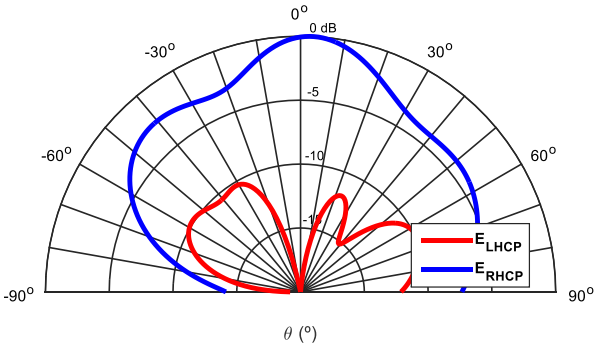

Design of aperture coupled MSA with off-centered feed

The **off-centered feed method** is formed by a square aperture coupled microstrip patch with the **two non-overlapping off-centered slots** in the ground plane, and with the feed network placed on the bottom layer.

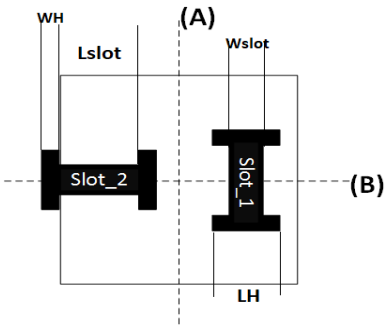

Parameter	Dimension (mm)
W	4.1
L	4.1
Lslot1	1.88
Wslot1	0.48
Lslot2	1.34
Wslot2	0.43
L_{H1}	1.3
W_{H1}	0.39
L_{H2}	1.64
W_{H2}	0.45
Lstub1	1.99
Lstub2	2.71

The axis (A) divides the patch in two symmetric parts and in each one it is placed one **slot** centered in the symmetry axis (B), with orthogonal positions (horizontal, vertical), also referred as **T configuration**.

The **feed network** is formed only by **two feedlines** (one for each slot) and the **quadrature hybrid** that creates the **90º phase shift** between the slots, exciting two orthogonal propagation modes **creating circular polarization**.

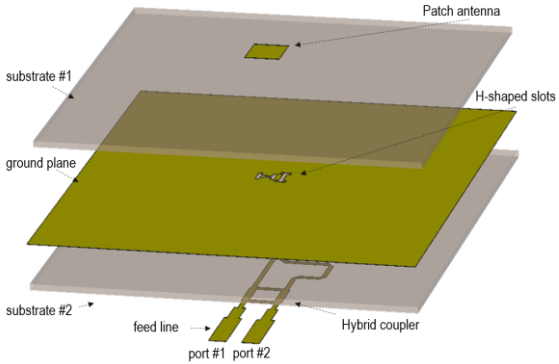

Design of aperture coupled MSA with off-centered feed

- **RHCP** - when the signal is applied in **port 1**
- **LHCP** - when the signal is applied in **port 2**

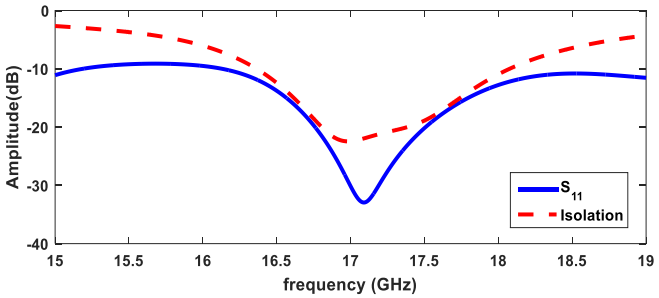

- Good S11 either when the signal was injected in the port 1 or in the port 2 (-29.87@17GHz) with an Impedance **bandwidth** of **more than 2.8GHz**.
- **Good isolation** between port 1 and port 2 (-22.34dB@17GHz)
- The **axial ratio** at 17GHz is 1.37dB and the AR **bandwidth** is **1.32GHz**.

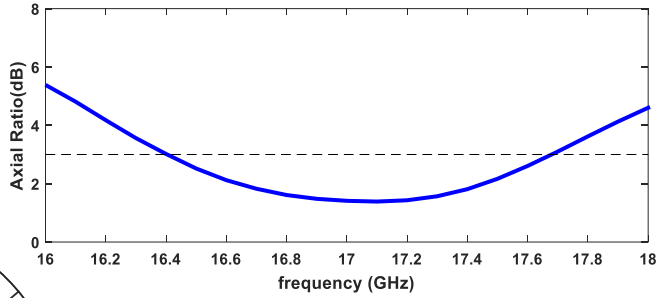

LHCP
Cross rejection of 23.67dB (θ=0º).
gain of 5.81 dBi

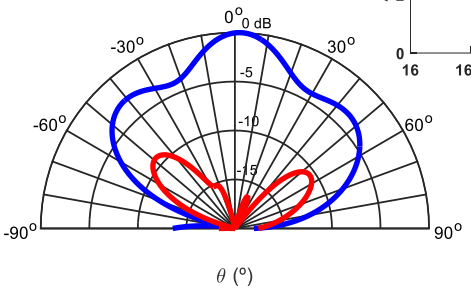

RHCP
Cross rejection of 22.07dB (θ=0º)
gain of 5.78 dBi

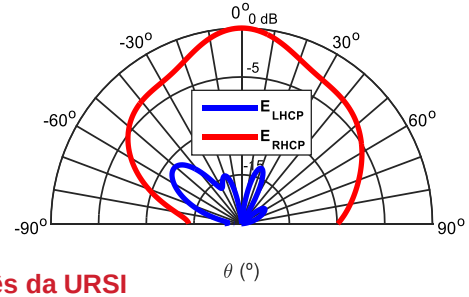

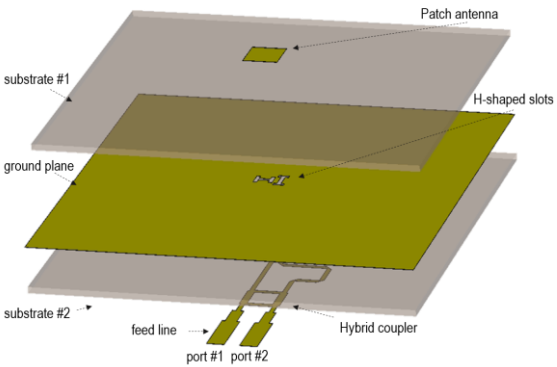

Conclusions

- Both designed antennas **are similar in terms of gain and size**, and are suitable for indoor applications of Wi-Fi communications.

- Concerning to the **technical characteristics**, these antenna present different performances.
  - Antenna with crossed slots:
    - better polarization purity level
    - higher rejection of the orthogonal component
    - **simpler structure**

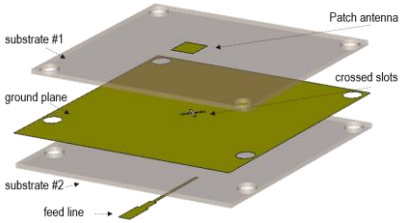

  - Antenna with off-centered slots:
    - higher complexity of its structure
    - it allows to **obtain either RHCP and LHCP** without performing any change in the antenna structure
    - **wider bandwidth**.

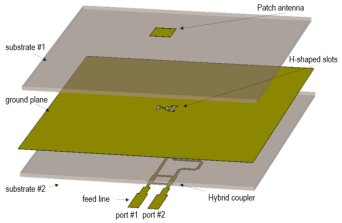

Thank you for your attention!